▪ THEORY ▪ APPLICATIONS ▪ CIRCUITS

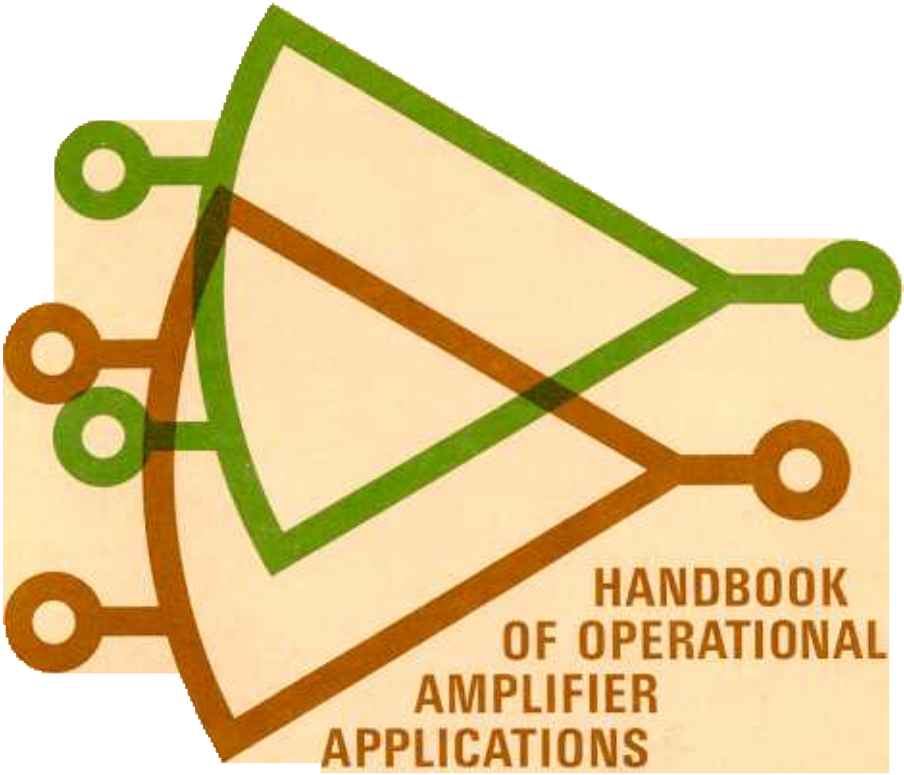

HANDBOOK OF OPERATIONAL AMPLIFIER APPLICATIONS

$1

BURR-BROWN

BB

FIRST EDITION
(Sixth Printing)

HANDBOOK OF OPERATIONAL AMPLIFIER APPLICATIONS

This handbook has been compiled by
the Applications Engineering Section
of
Burr-Brown Research Corporation.
This section will welcome the opportunity
of offering its technical assistance in
the application of operational amplifiers.

BURR-BROWN
RESEARCH CORPORATION
P. O. BOX 11400
TUCSON, ARIZONA, 85706

Circuit diagrams in this handbook are included to illustrate typical operational amplifier applications and are not intended as constructural information. Although reasonable care has been taken in preparing this handbook, no responsibility is assumed for inaccuracies or consequences of using information presented. Furthermore, such information does not convey to the purchaser of the amplifiers described any license under the patent rights of Burr-Brown Research Corporation or others.

PREFACE

The purpose of this handbook is to provide a single source of information covering the proper design of circuits employing the versatile modern operational amplifier. This manual will be helpful to the experienced user of operational amplifiers, as well as the new user, in extending the range of potential applications in which these devices can be used to advantage.

It is assumed that the reader will have a basic knowledge of electronics, but no particular knowlege of operational amplifiers is needed to use this handbook. The operational amplifier is treated as a circuit component inherently subject to certain rules of operation. The design of the operational amplifiers themselves is considered only when necessary to describe their less evident properties.

Readers with a working knowlege of operational amplifiers will want to refer directly to the circuit collection. Those concerned with evaluation and inspection should refer to the section on testing. Readers whose job functions have not previously brought them in contact with operational amplifiers will want to proceed directly through the handbook until the desired degree of familiarity is obtained.

Refinements are continuously being made in the design and application of operational amplifiers, yet the basic principles of application remain the same. Please do not hesitate to contact Burr-Brown at any time with questions or comments arising from the use of this handbook. It is, after all, intended for you, the user.

Thomas R. Brown, Jr., President

TABLE OF CONTENTS

Page

SECTION I

OPERATIONAL AMPLIFIER THEORY

INTRODUCTION

The operational amplifier is an extremely efficient and versatile device. Its applications span the broad electronic industry filling requirements for signal conditioning, special transfer functions, analog instrumentation, analog computation, and special systems design. Circuits utilizing operational amplifiers are characterized by the analog assets of simplicity and precision.

Computation - Control - Instrumentation

Originally, the term, "Operational Amplifier," was used in the computing field to describe amplifiers that performed various mathematical operations. It was found that the application of negative feedback around a high gain DC amplifier would produce a circuit with a precise gain characteristic that depended only on the feedback used. By the proper selection of feedback components, operational amplifier circuits could be used to add, subtract, average, integrate, and differentiate.

As practical operational amplifier techniques became more widely known, it was apparent that these feedback techniques could be useful in many control and instrumentation applications. Today, the general use of operational amplifiers has been extended to include such applications as DC Amplifiers, AC Amplifiers, Comparators, Servo Valve Drivers, Deflection Yoke Drivers, Low Distortion Oscillators, AC to DC Converters, Multivibrators, and a host of others.

What the operational amplifier can do is limited only by the imagination and ingenuity of the user. With a good working knowledge of their characteristics, the user will be able to exploit more fully the useful properties of operational amplifiers.

The Feedback Technique

The precision and flexibility of the operational amplifier is a direct resul of the use of negative feedback. Generally speaking, amplifiers employing

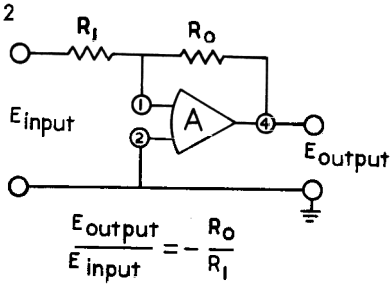

Fig. 1. Operational amplifier with feedback.

feedback will have superior operating characteristics at a sacrifice of gain. With enough feedback, the closed loop amplifier characteristics become a function of the feedback elements. In the typical feedback circuit, Fig. 1, the feedback elements are two resistors. The precision of the "closed loop" gain is set by the ratio of the two resistors and is practically independent of the "open loop" amplifier. Thus, amplification to almost any degree of precision can be achieved with ease.

NOTATION AND TERMINOLOGY

Various operational amplifier symbols are presently employed in industry. Since there is no real standardization, symbology must be agreed upon before circuits may be discussed. The symbols employed by Burr-Brown Research Corporation (shown in Fig. 2) will be used here.

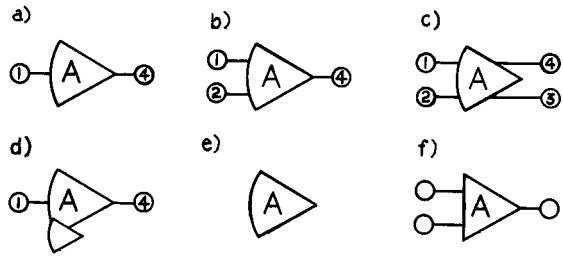

Fig. 2. Burr-Brown standard symbols: a) single ended, b) differential input, c) differential output, d) chopper stabilized, e) symbol without terminals shown, f) special purpose amplifier.

Only input and output terminals are commonly shown. In Fig. 2, there are either one or two input and output terminals depending on the amplifier type. The number appearing at each terminal is the identification used on Burr-Brown's popular encapsulated units and is used here for convenience in specifying the significance of each terminal connection.

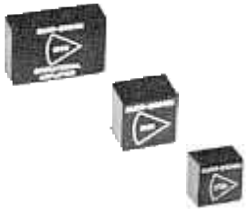

Fig. 3. Encapsulated Modules

Input Terminals

In Fig. 2a, 2b, 2c, and 2d, pin (1) is the "inverting input" or "summing point," meaning a positive voltage at (1) produces a negative voltage at (4). When only one input or output

terminal exists, its voltage is measured with respect to ground, often denoted by the familiar ground symbol, ⏚ . This is indicated by the term, "single ended." It is a popular ambiguity not to explain if a circuit, earth, or chassis ground is meant by this, so the use of a common line is preferred with the ground symbol used to indicate which line is the common.

When there is a pin (2), such as in Fig. 2b and 2c, the voltage at pin (1) may be measured with respect to pin (2). In use, such an amplifier responds to the difference between the voltages at pins (1) and (2), i.e., a "differential input."

In many circuits, pin (2) is connected to ground or may not exist. Due to the high gain of operational amplifiers, only a very small input voltage then appears at pin (1) and pin (1) is virtually at ground potential. For purposes of circuit analysis, it can be assumed to be ground--a "virtual ground."

Output Terminals

The relation between pins (1), (2), and (4) was stated above. If pin (3) exists, its voltage is approximately equal and opposite in polarity to the voltage at pin (4), each measured with respect to ground. When pins (3) and (4) are used as the output terminals without ground reference, they are known as "differential outputs."

Chopper Stabilized Amplifier Notation

Fig. 2d is a "chopper stabilized" amplifier which is a more stable, high performance operational amplifier. The extra circuitry in these units is denoted by the extra attached symbol. Both the input and output of this type are single ended, or referred to ground.

To summarize this information, Fig. 2e represents the basic operational amplifier symbol. Complete symbols will include one or two input terminals and one or two output terminals, with perhaps a chopper stabilizer added.

Fig. 2f is not a true operational amplifier. It represents a "committed" amplifier with internal feedback permanently connected.

Power Connections

Power is supplied to each of these units at connections as shown in Fig. 4. Such a connection is implied in all operational amplifier circuits. The dual supply presents the same absolute value of voltage to ground from either side, while the center

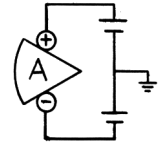

Fig. 4. Power supply connections.

connection ultimately defines the common line and ground potential. The exceptions to this are AC amplifier circuits which may use a single power supply. This is accomplished by creating a floating AC ground with DC blocking capacitors.

Summary of Notation

If it is understood that pin (2) and/or pin (3) may not be present, Fig. 5 is a concise summary of the notation introduced. The arrows denote the "direction" of the polarity at each terminal.

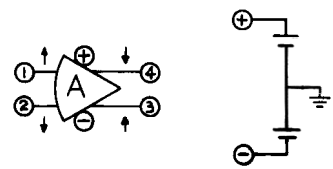

Fig. 5. Summary of notation introduced.

Electrical Circuit Models

The simplified models of the differential input operational amplifiers are shown in Fig. 6 and 7. As indicated in Fig. 6, the operational amplifier can be represented by an ideal voltage source whose value depends on the input voltage appearing across pins (1) and (2) plus the effects of finite input and output impedances. The value, A, is known as the open loop (without feedback) gain of the operational amplifier.

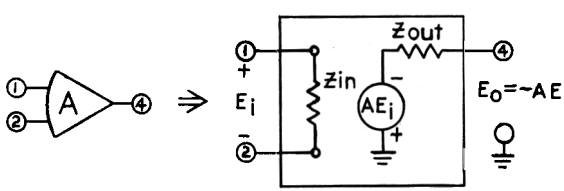

Fig. 6. Circuit model of the operational amplifier.

The simplified model of the differential output type (Fig. 7) is an accurate approximation only under special conditions of feedback (see page 21). Fig. 6 represents the model of the differential output type when it is used as a single ended output device, pin (3) simply being ignored.

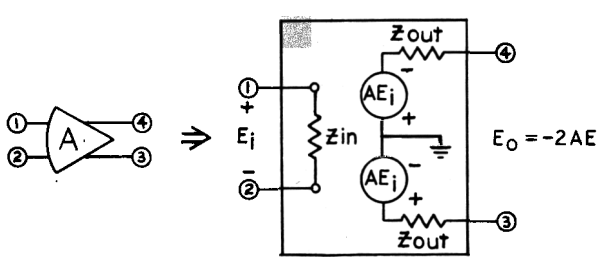

Fig. 7. Circuit model of the differential output operational amplifier.

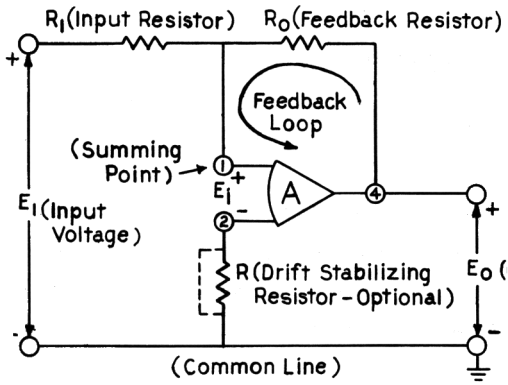

Fig. 8. Notation and terms used in closed loop circuits.

Circuit Notation

A circuit which will become very familiar as we progress into practical amplifier circuits and the notation we will use are shown in Fig. 8. Resistors R_I and R_o are replaced by complex impedances Z_I and Z_o in some applications of this circuit.

THE IDEAL OPERATIONAL AMPLIFIER

In order to introduce operational amplifier circuitry, we will use an ideal model of the operational amplifier to simplify the mathematics involved in deriving gain expressions, etc., for the circuits presented. With this understanding as a basis, it will be convenient to describe the properties of the real devices themselves in later sections, and finally to investigate circuits utilizing practical operational amplifiers.

To begin the presentation of operational amplifier circuitry, then, it is necessary first of all to define the properties of a mythical "perfect" operational amplifier. The model of an ideal operational amplifier is shown in Fig. 9.

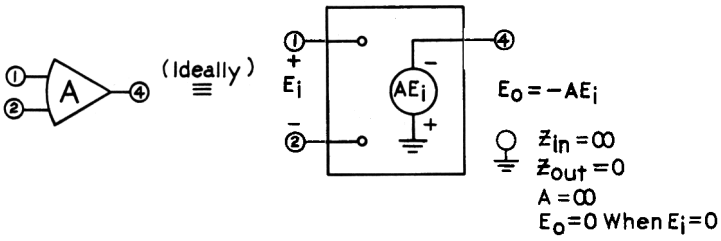

Fig. 9. Equivalent circuit of the ideal operational amplifier.

Defining the Ideal Operational Amplifier

Gain - The primary function of an amplifier is to amplify, so the more gain the better. It can always be reduced with external circuitry so we assume gain to be infinite.

Input Impedance - Input impedance is assumed to be infinite. This is so the driving source won't be affected by power being drawn by the ideal operational amplifier.

Output Impedance - The output impedance of the ideal operational amplifier is assumed to be zero. It then can supply as much current as necessary to the load being driven.

Response Time - The output must occur at the same time as the input so the response time is assumed to be zero. Phase shift will be 180° (input pin (1) is the inverting input). Frequency response will be flat and bandwidth infinite because AC will be simply a rapidly varying DC level to the ideal amplifier.

Offset - The amplifier output will be zero when a zero signal appears between the two inputs, pins (1) and (2).

A Summing Point Restraint

An important by-product of these properties of the ideal operational amplifier is that the summing point, pin (1), will conduct no current to the amplifier. This property is to become an important tool for circuit analysis and design, for it gives us an inherent restraint on our circuit--a place to begin analysis. Later on, it will also be shown that pins (1) and (2) must remain at the same voltage, giving us a second powerful tool for analysis as we progress into the circuits of the next section.

CIRCUITS AND ANALYSES USING THE IDEAL OPERATIONAL AMPLIFIER

A description of the ideal operational amplifier model was presented in the last section, and the introduction of complete circuits may now begin. Though the ideal model may seem a bit remote from reality--with infinite gain, bandwidth, etc.,--it should be realized that the closed loop gain relations which will be derived in this section are directly applicable to real circuits--to within a few tenths of a percent in most cases. We will show this later with a convincing example (page 21).

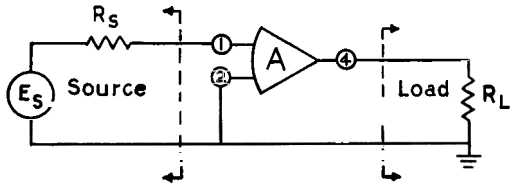

Fig. 10. Open Loop Operation

The Desirability of Feedback

Consider the open loop amplifier used in the circuit of Fig. 10. Note that no current flows from the source into the input, pin (1),--the summing point restraint derived in the previous section--hence, there is no voltage drop across R_s, and E_s appears across the amplifier input. When E_s is zero, the output is zero. If E_s takes on any non-zero value, the output voltage increases to saturation, and the amplifier acts as a switch.

The open loop amplifier may be employed in a limited number of applications such as voltage comparison. Its greatest utility, however, is obtained when negative feedback is employed.

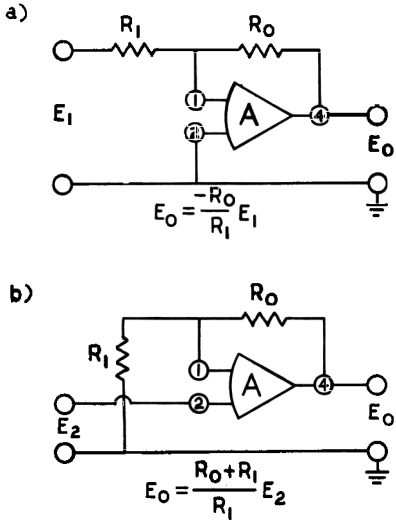

Fig. 11. Basic Amplifier Circuits: a) Inverting. b) Non-inverting.

Two Important Feedback Circuits

Fig. 11 shows the connections and the gain equations for two basic feedback circuits. The application of negative feedback around the ideal operational amplifier results in another important summing point restraint: The voltage appearing between the differential amplifier inputs, pins (1) and (2), approaches zero when the feedback loop is closed.

Consider either of the two circuits shown in Fig. 11. If a small voltage,

measured at pin (1) with respect to pin (2), is assumed to exist, the amplifier output voltage at pin (4) will be of opposite polarity and can always increase in value (with infinite output available) until the voltage between pins (1) and (2) becomes infinitesimally small. When the amplifier output is fed back to input pin (1), the output voltage will always take on the value required to drive the signal between pins (1) and (2) toward zero.

The two summing point restraints are so important that they are repeated here:

1. No current flows into either input terminal of the ideal operational amplifier.

2. When negative feedback is applied around the ideal operational amplifier, the differential input voltage approaches zero.

These two statements will be used repeatedly in the analysis of the feedback circuits to be presented in the rest of this section.

Voltage Follower

The circuit in Fig. 12 demonstrates how the addition of a simple feedback loop to the open loop amplifier converts it from a device of limited usefulness to one with many practical applications.

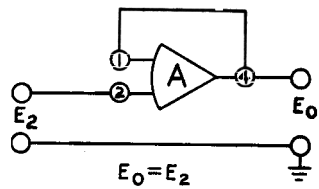

Fig. 12. Voltage follower.

Analyzing this circuit, we see that the voltage at pin (2) is E_2, the voltage at pin (1) approaches the voltage at pin (2), and pin (4) is at the same voltage as pin (1). Hence, $E_o = E_2$, and our analysis is complete. The simplicity of our analysis is evidence of the power and utility of the summing point restraints we derived and have at our disposal. Our result also may be verified by mathematical analysis very simply (see page 9).

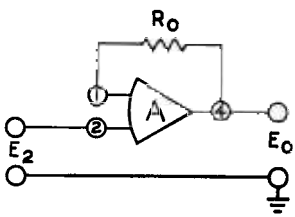

Fig. 13. Feedback resistor added to the voltage follower.

Since no current flows at pin (2), the input impedance of the voltage follower is infinite. The output impedance is just that of the ideal operational amplifier itself, i.e. zero. Note also that no current flows through the feedback loop, so any arbitrary (but finite) resistance may be placed in the feedback loop without changing the properties of the ideal

THE VOLTAGE FOLLOWER

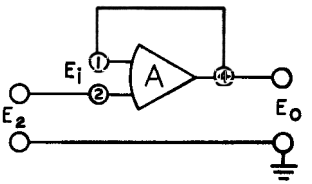

Let the voltage at pin (1) with respect to pin (2) be E_i

By Kirchoff's voltage law:

$$E_2 + E_i = E_o$$

But by definition:

$E_o = -AE_i$; where A is the gain of the operational amplifier.

Then:

$$E_i = \frac{-E_o}{A}$$

And substituting:

$$E_2 - \frac{E_o}{A} = E_o$$

Letting A go to infinity, $\frac{E_o}{A}$ approaches zero, and:

$$E_o = E_2$$

circuit, shown in Fig. 13. No voltage would appear across the feedback element and the same mathematical analysis would hold.

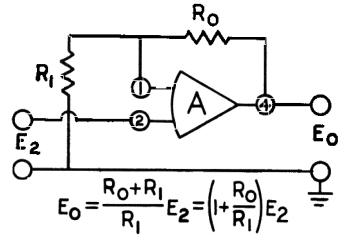

Fig. 14. Non-inverting amplifier.

Unity gain circuits are used as electrical buffers to isolate circuits or devices from one another and prevent undesired interaction. As a voltage following power amplifier, this circuit will allow a source with low current capabilities to drive a heavy load.

The gain of the voltage follower with the feedback loop closed (closed loop gain) is unity. The gain of the ideal operational amplifier without a feedback loop (open loop gain) is infinity. Thus, we have traded gain for control by adding feedback. Such a severe sacrifice of gain--from infinity to unity--is not necessary in most circuits. The rest of the ideal circuits to be studied will give any (finite) closed loop gain desired while maintaining control through feedback.

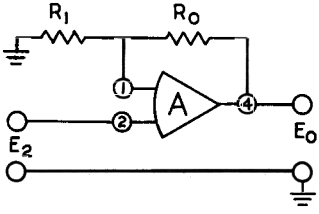

Fig. 15. Non-inverting amplifier redrawn to show similarity to the voltage follower.

Non-Inverting Amplifier

The circuit in Fig. 14 was chosen for analysis next because of its relation to the voltage follower. Often it is drawn as in Fig. 15 which makes it evident that the voltage follower is simply a special case of the non-inverting amplifier.

Since no current flows into pin (1), R_o and R_I form a simple voltage divider (Fig. 16). The same voltage must appear at pins (1) and (2).

From the voltage division formula:

$$E_I = \frac{R_I}{R_I + R_o} E_o, \text{ and } E_I = E_2;$$

so that

$$\frac{E_o}{E_2} = \frac{R_I + R_o}{R_I}.$$

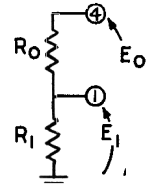

Fig. 16. Non-inverting amplifier analyzed as a voltage divider.

Input impedance of the non-inverting amplifier circuit is infinite since no current flows into pin (2). Output

THE NON-INVERTING AMPLIFIER

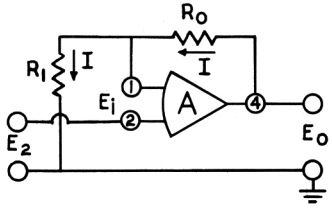

Let the voltage at pin (1) with respect to pin (2) be E_i and the gain of the operational amplifier be A (ideally, $A = \infty$).

The voltage at pin (1) is then $E_2 + E_i$ and, since the current in R_1 must equal the current in R_o:

$$\frac{E_i + E_2}{R_1} = \frac{E_o - (E_i + E_2)}{R_o}$$

but:

$$E_o = -AE_i$$

$$E_i = \frac{-E_o}{A}$$

Letting A go to infinity, E_i approaches zero and the first equation becomes:

$$\frac{E_2}{R_1} = \frac{E_o - E_2}{R_o}$$

Solving:

$$E_2 (R_o + R_1) = E_o R_1$$

$$\frac{E_o}{E_2} = \frac{R_o + R_1}{R_1}$$

impedance is zero since output voltage is ideally independent of output current. Closed loop gain is $\frac{R_o + R_I}{R_I}$, hence can be any desired value above unity.

Such circuits are widely used in control and instrumentation where non-inverting gain is required.

INVERTING AMPLIFIER

The inverting amplifier appears in Fig. 17. This circuit and its many variations form the bulk of commonly used operational amplifier circuitry. Single ended input and output versions were first used, and they became the basis of analog computation. Today's modern differential input amplifier is used as an inverting amplifier by grounding pin (2) and applying the input signal to the inverting input terminal.

Since the amplifier draws no input current and the input voltage approaches zero when the feedback loop is closed (the two summing point restraints), we may write

$$\frac{E_I}{R_I} + \frac{E_o}{R_o} = 0.$$

Hence

$$\frac{E_o}{E_I} = -\frac{R_o}{R_I}.$$

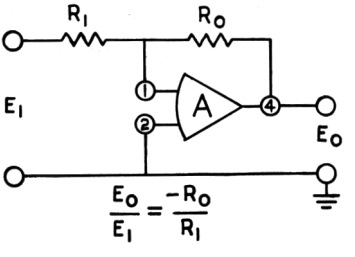

Fig. 17. Inverting amplifier.

Input impedance to this circuit is not infinite as in the two previous circuits. Pin (1) is at ground potential so the driving source effectively "sees" R_I as the input impedance. Output impedance is zero as in the two previous circuits. Closed loop gain of this circuit is $\frac{-R_o}{R_I}$.

Intuitive Analysis Techniques

The popularity of the inverting amplifier has been mentioned already. In control and instrumentation applications, its practical value lies in the ease with which desired input impedance and gain values can be tailored to fit the requirements of the associated circuitry. Its utility is reflected in the variety of intuitive devices which are commonly used to simplify its analysis.

If we draw the summing point, pin (1) and output terminal, pin (4), of the inverting amplifier as in Fig. 18a, the dotted line serves as a reminder that pin (1)

THE INVERTING AMPLIFIER

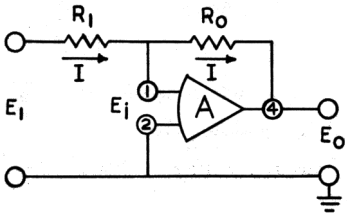

Let the voltage at pin (1) be E_i and the open loop operational amplifier gain be A (ideally, $A = \infty$).

Since equal currents flow in R_o and R_1:

$$\frac{E_1 - E_i}{R_1} + \frac{E_o - E_i}{R_o} = 0$$

But by definition:

$$E_o = -AE_i$$

$$E_i = -\frac{E_o}{A}$$

Letting A go to infinity, E_i approaches zero and:

$$\frac{E_1}{R_1} + \frac{E_o}{R_o} = 0$$

or:

$$\frac{E_o}{E_1} = -\frac{R_o}{R_1}$$

is at ground potential but conducts no current to ground. Pin (4) can supply any needed current, and analysis quickly becomes rote. Another such device uses the analog of a lever to show as vectors the voltage relations which exist using pin (1) as the fulcrum (Fig. 18b).

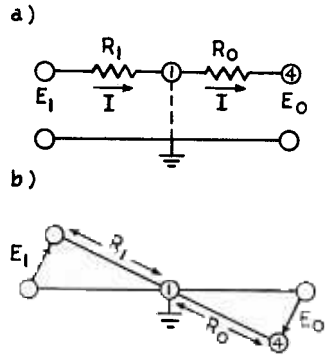

Fig. 18. Intuitive devices for analysis of circuits based on the inverting amplifier. a) A current device. b) A voltage "Lever" device.

Current Output

So far, we have considered voltage as the output of the inverting amplifier, but it also finds wide application as a current supplying device. This is accomplished by placing the load in the feedback loop as in Fig. 19. Since pin (1) is ground potential, the current through R_I is $\frac{E_I}{R_I}$. No current flows into pin (1), so $I_L = \frac{-E_I}{R_I}$ which is independent of R_L. In similar configurations, the inverting amplifier can serve as a linear meter amplifier or deflection coil driver. Input impedance is R_I as before.

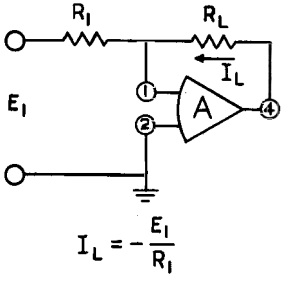

Fig. 19. Inverting amplifier as a linear current output device.

Reactive Elements

Though only resistances have been used in the input and feedback loop of the amplifiers presented so far, the general form of the inverting amplifier is shown in Fig. 20, where Z_I and Z_o are complex impedances in general. The gain relation may be verified in the same manner as for the resistive case by summing currents using complex notation.

There is an area of control application utilizing this general form of the inverting amplifier. Many times it is necessary to construct a network with some specifically designated transfer function.

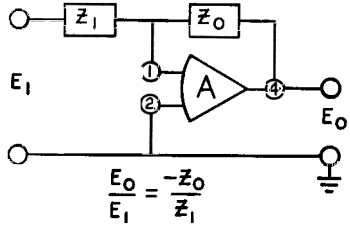

Fig. 20. General form of the inverting amplifier.

By reducing this transfer function to the ratio of two polynomials, a table may be consulted for suitable passive networks to be used in the inverting amplifier.

Other uses of reactive elements are found in the integrator and differentiator circuits which follow.

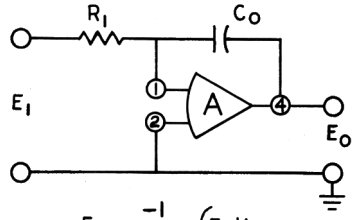

$$E_O = \frac{-1}{R_I C_O} \int E_I dt$$

Fig. 21. Integrator Circuit

Integrator

If a capacitor is used as the feedback element in the inverting amplifier, Fig. 21, the result is an integrator. An intuitive grasp of the integrator action may be obtained from the statement under the section, "Current Output," that current through the feedback loop charges the capacitor and is stored there as a voltage from pin (4) to ground. This is a voltage input current integrator.

Differentiator

Using a capacitor as the input element to the inverting amplifier, Fig. 22, yields a differentiator circuit.

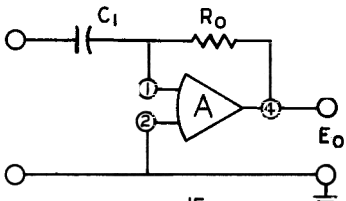

$$E_O = -R_O C_I \frac{dE_I}{dt}$$

Fig. 22. Differentiator Circuit

Consideration of the device in Fig. 23 will give a feeling for the differentiator circuit. Since pin (1) is at ground potential:

$$I_c = C_I \frac{dE_I}{dt}, \text{ and } I_c - I_R = 0,$$

so that

$$C_I \frac{dE_I}{dt} + \frac{E_o}{R_o} = 0$$

$$E_o = -R_o C_I \frac{dE_I}{dt}$$

It should be mentioned that of all the circuits presented in this section, the differentiator is the one which will operate least successfully with real components. The capacitive input makes it particularly susceptible to random noise and special techniques will be discussed later for remedying this effect.

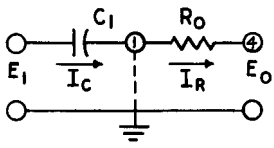

Fig. 23. An intuitive picture of the differentiator.

Voltage Adder

In a great many practical applications,

THE INTEGRATOR AND THE DIFFERENTIATOR

Assume the validity of the ideal gain expression for the generalized Inverting Amplifier:

$$E_o = \frac{-Z_o}{Z_I} E_I$$

The operational form of capacitive impedance is:

$$Z_c = \frac{1}{Cp}$$

where the symbol, p, is the operator, $\frac{d}{dt}$, or for AC analysis is the complex frequency, $j2\pi f$.

For the integrator; $Z_o = \frac{1}{Cp}$, $Z_I = R_I$

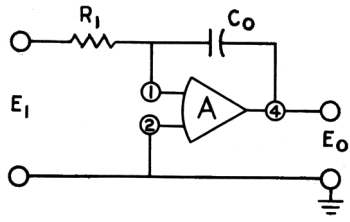

$$E_o = \frac{-Z_o}{Z_I} E_I = \frac{-E_I}{R_I C_o p} = -\frac{1}{R_I C_o} \int E_I dt$$

For the differentiator; $Z_o = R_o$, $Z_I = \frac{1}{Cp}$

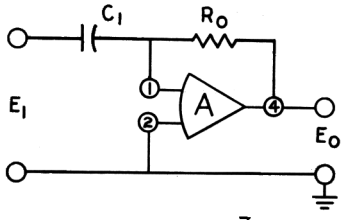

$$E_o = \frac{-Z_o}{Z_I} E_I = -R_o C_I p E_I = -R_o C_I \frac{dE_I}{dt}$$

the input to the inverting amplifier is more than one voltage. The simplest form of multiple input is shown in Fig. 24. Current in the feedback loop is the algebraic sum of the current due to each input. Each source, E_1, E_2, etc., contributes to the total current, and no interaction occurs between them. All inputs "see" R_1 as the input impedance, while gain is $\frac{-R_o}{R_1}$. Direct voltage addition may be obtained with $R_o = R_1$.

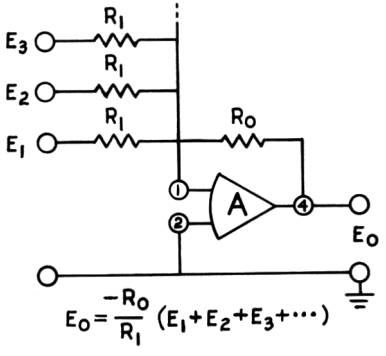

Fig. 24. Voltage adding circuit.

Scaling Summer

A more general form of adder allows scaling of each input before addition (Fig. 25). The adder above is obviously a special case of this circuit. Each input "sees" its respective input resistor as the input resistance.

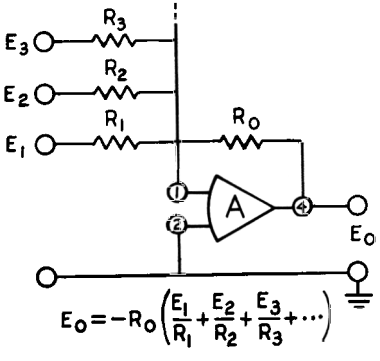

Fig. 25. Scaling summer circuit.

Combining Circuit Functions

The basic inverting amplifier configuration is very flexible--so flexible, in fact, that it would be difficult to overestimate its usefulness. Additional applications which already may have occurred to the reader include: a variable gain amplifier using a potentiometer for R_1 or R_o or both; a summing integrator by using a feedback capacitor in the summing amplifier; and many others.

Differential Input Amplifier

Fig. 26 shows a circuit utilizing both inputs to the differential operational amplifier. Its operation can be appreciated best by considering it a combination of the inverting and non-inverting amplifier,

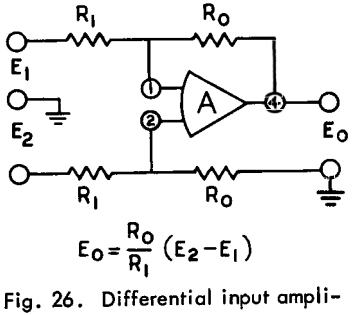

Fig. 26. Differential input amplifier circuit.

THE VOLTAGE SUMMER

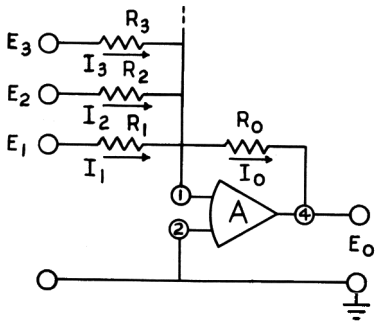

Assume the ideal summing point restraints:

1. pin (1) is at ground potential
2. $-I_o + I_1 + I_2 + I_3 + \ldots = 0.$

The current, I_o, is given by:

$$= \frac{-E_o}{R_o} = \frac{E_1}{R_1} + \frac{E_2}{R_2} + \frac{E_3}{R_3} +$$

So that:

$$E_o = -R_o \left(\frac{E_1}{R_1} + \frac{E_2}{R_2} + \frac{E_3}{R_3} + \ldots\right)$$

Thus, each input, E_n, is multiplied by a factor, $\frac{-R_o}{R_n}$, before summing.

where the input voltage is tapped from the divider formed by the lower R_o and R_I (Fig. 27). Hence, the output due to E_2 is

$$E_o = \frac{R_o + R_I}{R_I}\left(\frac{E_2 R_o}{R_I + R_o}\right) = \frac{R_o}{R_I} E_2$$

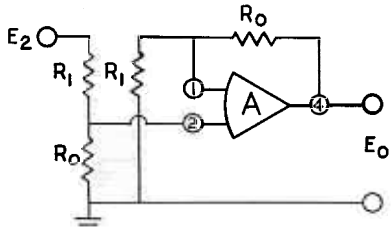

Fig. 27. Analyzing the differential input amplifier circuit as a non-inverting amplifier.

With E_2 grounded, the circuit is simply an inverting amplifier with pin (2) grounded through a resistance (which conducts no current). Hence, the output due to E_I is

$$E_o = \frac{-R_o}{R_I} E_I \qquad \text{so the total output is} \qquad E_o = \frac{R_o}{R_I}(E_2 - E_I)$$

The input pins (1) and (2) reside at the voltage level $\frac{E_2 R_o}{R_I + R_o}$, however, which may have a detrimental effect on a real operational amplifier. (See the section on common mode voltage limit.)

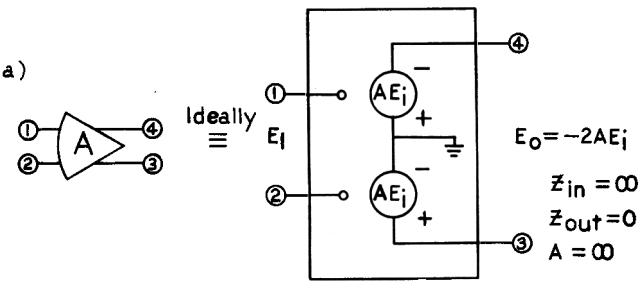

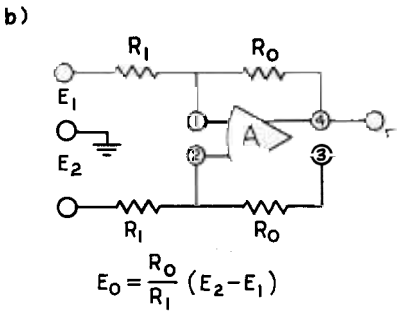

Fig. 28. The differential output operational amplifier. a) Ideal equivalent circuit. b) Balanced output amplifier.

Since the action of the voltage divider formed by the bottom R_o and R_I is independent of the remainder of the circuit, the voltage common to pins (1) and (2) is independent of E_I. The source of E_2 "sees" $R_o + R_I$, the voltage divider itself. Output impedance is zero, as before.

Balanced Amplifier

The differential output type of operational amplifier is redrawn

THE DIFFERENTIAL INPUT AMPLIFIER

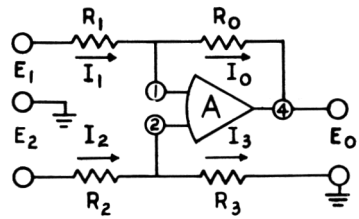

Assume the ideal input restraints:

1. pins (1) and (2) reside at the common mode voltage, E_f.
2. $I_o = I_1$, $I_2 = I_3$

Current in the top leg is given by:

$$I_1 = \frac{E_1 - E_f}{R_1} = \frac{E_f - E_o}{R_o}$$

Solving for E_o:

$$E_o = E_f\left(1 + \frac{R_o}{R_1}\right) - \frac{R_o}{R_1} E_1$$

Due to current in the bottom leg, R_2 and R_3 act as a simple voltage divider:

$$E_f = \frac{R_3}{R_2 + R_3} E_2$$

Substituting:

$$E_o = \left(\frac{R_3}{R_2 + R_3}\right)\left(1 + \frac{R_o}{R_1}\right) E_2 - \frac{R_o}{R_1} E_1$$

Or:

$$E_o = \frac{R_3}{R_1} \left(\frac{R_1 + R_o}{R_2 + R_3}\right) E_2 - \frac{R_o}{R_1} E_1$$

For $R_2 = R_1$ and $R_3 = R_o$, this reduces to:

$$E_o = \frac{R_o}{R_1} (E_2 - E_1)$$

(Ground reference point does not matter. Input may be "floating" if desired.)

with its ideal equivalent in Fig. 28a. Any of the previous single ended output circuits may use the differential output type since the relation between pins (1), (2), and (4) is fixed. The roles of the input terminals may even be reversed by applying feedback between pins (3) and (2) instead of pins (4) and (1). In either case, the unused output terminal may be ignored. A single feedback path only determines the voltage of the output terminal from which the feedback is taken.

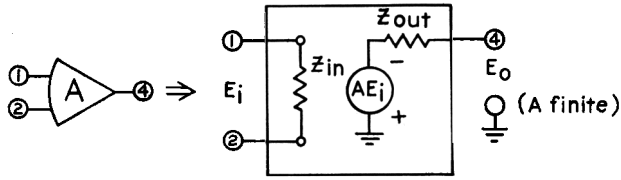

Fig. 29. Equivalent circuit of a real operational amplifier.

To form a differential or balanced output amplifier, then, it is necessary to take feedback from both output terminals as in Fig. 28b. This circuit is a differential form of the inverting amplifier since neither output terminal is grounded. Z_{out} is ideally zero, and closed loop (differential) gain is $\frac{-R_o}{R_I}$.

A differential output amplifier may be used to convert a single ended voltage into a pair of balanced voltages by grounding either signal input. Such devices as servo motors, push-pull amplifier stages, and symmetrical transmission lines may be driven by the differential output amplifier.

Ideal-Real Comparison

Throughout this section, the idealized operational amplifier has been used as a model. Before progressing into the next section concerning real operational amplifier characteristics, it will be demonstrated by example that the gain expressions which have been derived are indeed valid in the real case.

The equivalent circuit of a real operational amplifier might appear as in Fig. 29. Connecting it as in Fig. 30 gives a X10 amplifier circuit. When the effect of finite gain, input impedance, and output impedance are taken into account, the gain characteristics are given by:

$$\frac{E_o}{E_I} = -\frac{Z_o}{Z_I}\left(\frac{1}{1+\mu}\right)$$

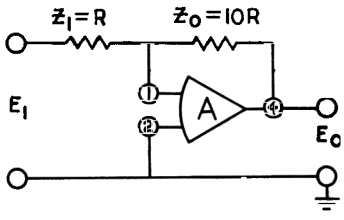

Fig. 30. Amplifier circuit using a real operational amplifier.

THE DIFFERENTIAL (BALANCED) OUTPUT AMPLIFIER

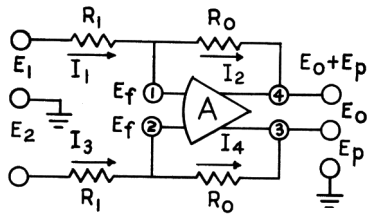

Assume the ideal input restraints:

1. pins (1) and (2) reside at the same common mode voltage, E_f
2. $I_1 = I_2$, $I_3 = I_4$

Current in the top leg is given by:

$$I_1 = \frac{E_1 - E_f}{R_1} = \frac{E_f - (E_o + E_p)}{R_o}$$

~ I_2

Current in the bottom leg is given by:

$$I_3 = \frac{E_2 - E_f}{R_1} = \frac{E_f - E_p}{R_o}$$

Subtracting these two equations:

$$\frac{E_1 - E_2}{R_1} = \frac{-E_o}{R_o}$$

Or:

$$E_o = \frac{R_o}{R_1}(E_2 - E_1)$$

(Ground reference is not critical. Input may be "floating" if desired.) Note that the values of E_f and E_p are not uniquely determined by the above equations. In practice, this means that E_p will reside at some value determined by the internal circuitry of the operational amplifier itself plus the effects of drift. However, E_o will remain accurately fixed by the differential gain equation above.

where $$\mu = \frac{\left(1 + \frac{Z_{out}}{Z_o} + \frac{Z_{out}}{Z_{load}}\right)\left(1 + \frac{Z_o}{Z_I} + \frac{Z_o}{Z_{in}}\right)}{\left(A - \frac{Z_{out}}{Z_o}\right)}$$

This may be expanded as

$$\frac{E_o}{E_I} = \frac{-Z_o}{Z_I}\left(1 - \mu + \mu^2 - \mu^3 + \quad .\right)$$

and, where $\mu \ll 1$, as is usually the case, simplifies to

$$\frac{E_o}{E_I} = \frac{-Z_o}{Z_I}\left(1 - \mu\right)$$

Now, letting the open loop parameters take on the following values which are typical, though conservatively estimated,

A	$= 10,000$	Z_I	$= 10K$
Z_{in}	$= 50K$	Z_o	$= 100K$
Z_{out}	$= 100$	Z_{load}	$= 10K$

Solving, we get $\mu = 0.0013$ (which justifies our assumption above) and the real closed loop gain is

$$\frac{E_o}{E_I} = -10.000 + 0.013 = -9.987$$

instead of -10 which would be ideally expected.

The gain of this circuit is accurate to within 0.13% of the idealized value. This entire error may be considered as a "calibration" error and completely cancelled by a slight adjustment of the feedback resistor. Once such an adjustment is made, the gain accuracy of the circuit would be affected less than 0.02% should the gain of the amplifier change by 10%.

CHARACTERISTICS OF PRACTICA OPERATIONAL AMPLIFIERS

The modern operational amplifier is a solid state, high gain, DC voltage amplifier. Practical feedback circuits employing it are based on the circuits which were derived in the preceeding section using the ideal operational amplifier model. Substituting a real for an ideal operational amplifier will result in some predictable variation from ideal operation which is negligibly small in many applications. This

section is intended to acquaint the reader with the characteristics of the real devices so that they may be utilized to the fullest possible extent in practical circuits.

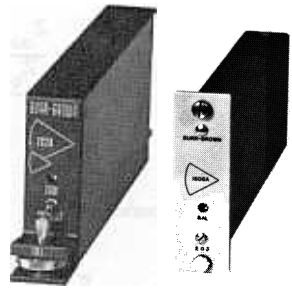

/26 and /16 Series Modules

Open Loop Characteristics

In the case of the ideal operational amplifier, circuit operation was seen to be dependent entirely on the feedback used. It is possible to use the real operational amplifier open loop, but control and stability problems are encountered due to the high open loop gain (X100,000 typically at DC). Random noise from the input circuit and noise generated within the operational amplifier itself plus any variations in amplifier characteristics due to temperature change or aging components are all multiplied by open loop gain. Slight variations in the manufactured unit become noticeable due to this effect, hence open loop specifications are sometimes given conservative "typical" values.

Open loop operational amplifier specifications have a relatively remote connection to closed loop operation of a circuit since they do not as much define circuit operation as they do limit it. The sheer numbers of useful operational amplifier circuits make it impossible for a manufacturer to completely specify closed loop operation. Since each closed loop circuit is, in essence, a special case, it is necessary to understand both open and closed loop characteristics before the intelligent design of circuitry using operational amplifiers can begin. Any statements which are to be made about operational amplifier circuits must be qualified by the information "open loop" or "closed loop," and the character of the feedback should be specified for "closed loop" information.

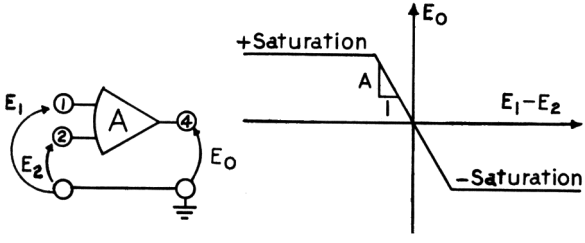

Fig. 31. Input-output transfer relation for the open loop operational amplifier.

Open Loop Transfer Curve

The open loop input-output relationship for a rather "well-behaved" practical operational amplifier is shown in Fig. 31. The open loop gain, A, is measured by the slope of the curve so it can be seen

that the operational amplifier only amplifys between the saturation values of E_o. The slope of the amplifying portion of the transfer curve is dependent on the frequency of the input voltage while the saturation voltages remain constant. This relation between input and output holds regardless of the feedback configuration used as long as the amplifier is not in overload.

The "well behaved" aspect of this operational amplifier is the fact that its transfer curve goes through the origin. In practice, all operational amplifiers exhibi: offset, a fault which effectively shifts the transfer curve from the origin. To complicate matters further, this offset value will wander, producing drift. Both of these phenomena are of the same order of magnitude as the input voltage necessary to drive the open loop amplifier into saturation (a few millivolts) and a necessary part of circuit design is to minimize their effect.

Open Loop Operation

As an example of open loop operation, the Burr-Brown Model 3003/15 might be used as an open loop DC amplifier. DC open loop gain is 160,000 and output saturation occurs at ±10 volts. Hence, for linear operation, the input voltage cannot exceed $\frac{10}{160,000} = \pm 67$ microvolts. The open loop amplifier is also subject to the full effect of random noise, offset, and drift, any of which may be greater than 67 microvolts.

While the open loop amplifier is not generally useful for linear operation, there are practical circuits using the high open loop gain of the modern operational amplifier in sensitive null detection and voltage comparison applications.

Output Limiting

Burr-Brown specifications for operational amplifiers give a voltage and a current output rating plus output short circuit current. Output saturation voltages are commonly slightly greater than the rated output value when the nominally specified power supply voltage is used. Burr-Brown operational amplifiers will supply full output voltage to a load drawing full rated output current for an indefinite period.

In addition, for lower output voltages, slightly higher output current is available up to the short circuit conditions. Though the current ratings are conservative, exceeding the rated current should be attempted only after some calculation, unless the output voltage is extremely low. Output voltage is self-limiting, however, and outputs above the saturation voltage will not occur. The output stage of the operational amplifier may be saturated without damage for an indefinite period of time.

FREQUENCY DEPENDENT PROPERTIES

Introduction

The AC response characteristics of the operational amplifier are very important considerations in circuit design. DC operational amplifiers will operate successfully at audio, ultrasonic, and low radio frequencies with some predictable variation from DC operation. Circuits designed to operate at DC are also affected by the AC response since random noise and varying DC levels contain AC components.

Open Loop Gain and the Bode Plot

The frequency response curve of operational amplifier circuitry is conveniently represented by the Bode plot. The absolute value of voltage gain is plotted in db (the hybrid but popular "decibel" defined by db = 20 log $\frac{E_o}{E_I}$ so that a gain of 10 is 20db, a gain of 100 is 40db, etc.) versus the orthodox decade logarithmic frequency scale. The Bode plot of a typical Model 3003/15. Operational Amplifier's open loop gain is shown in Fig. 32 along with a convenient linear approximation to the actual curve.

Bode Plot Construction

The shape of the Bode plot shown in Fig. 32 is characteristic of all standard Burr-Brown operational amplifiers. It is so characteristic, in fact, that any open loop Bode plot may be approximated rapidly from only two bits of information about the particular operational amplifier: 1) DC open loop gain, and 2) the unity gain crossover frequency (open loop bandwidth). As an example, Model 3003/15 has DC open loop gain of 110db and open loop bandwidth of 2.0Mc; both values are given in the specification sheet. We can sketch the Bode plot as indicated in

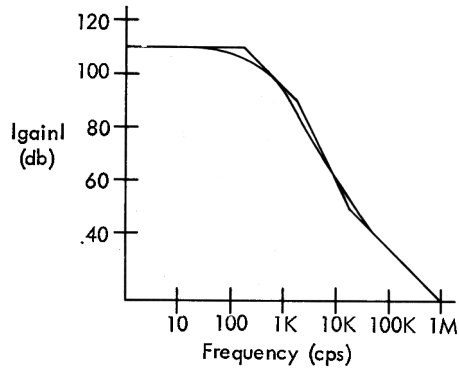

Fig. 32. Bode plot of an operational amplifier and its linear approximation.

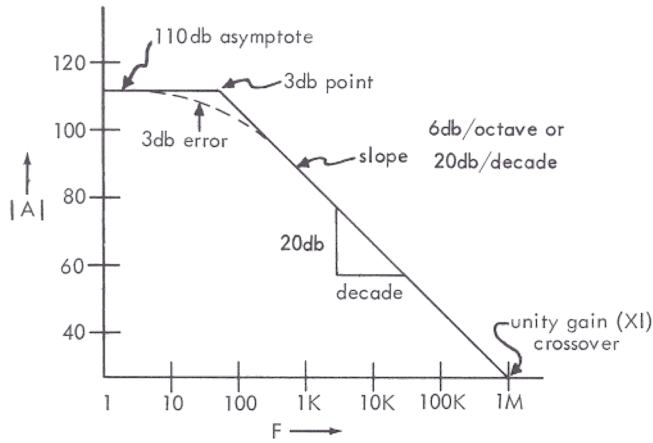

Fig. 33. Sketching the Bode plot from information given in Burr-Brown specifications.

Fig. 33. Comparing this sketch with the typical response of Fig. 32, the constant gain bandwidth product sketch is observed to be a conservative approximation to the typical response. Since the typical gain fall off exceeds 6db per octave at some points, there may be slight peaking at intermediate closed loop gains. Such peaks do not indicate a condition of instability.

Closed Loop Gain

When feedback is used around an operational amplifier, the closed loop gain of the circuit is determined by a ratio involving the input and feedback impedances used. If the closed loop gain called for by the feedback configuration is greater than the open loop gain available from the operational amplifier for any particular frequency, closed loop gain will be limited to the open loop gain value. Thus a plot of the closed loop gain of a X100 (40db) amplifier using the Model 3003/15 would appear as in Fig. 34.

Stability

As indicated above, the closed loop amplifier circuit cannot supply more gain than is available from the operational amplifier itself, so at high frequencies, the closed loop Bode plot intersects and follows the open loop gain curve. The intersection point between the closed and open loop curves is important because the angle between the two curves--or, more precisely, the "rate of closure" since the curves aren't actually straight lines--determines whether the closed loop

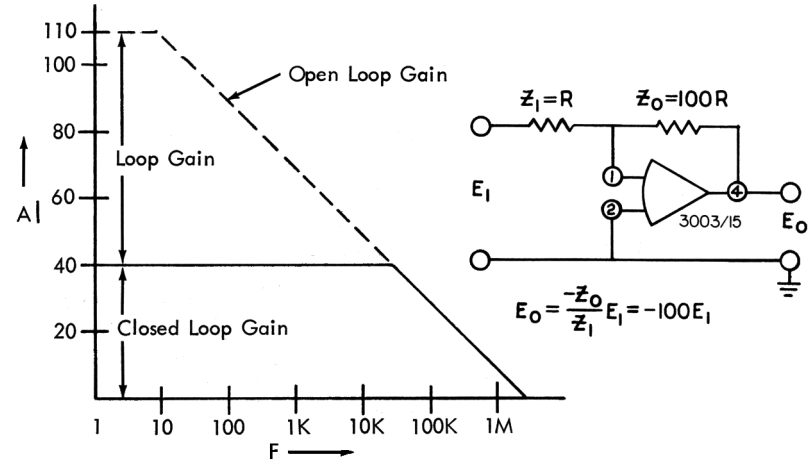

Fig. 34. Closed loop gain of a X100 (40db) inverting amplifier using Model 3003/15.

amplifier, differentiator, etc., being designed will be stable. Principle: If the rate of closure between the open and closed loop sections of the Bode plot is greater than 12db per octave (40db per decade) the system is likely to be unstable. Bode plots may be varied almost at will to insure stability or to provide some tailor-made frequency response characteristic.

Compensation

The open loop gain of standard Burr-Brown operational amplifiers is tailored or "compensated" with one or more simple resistor and capacitor combinations (Fig. 35). Phase compensation is effected in order that the majority of popular circuits utilizing operational amplifiers will be

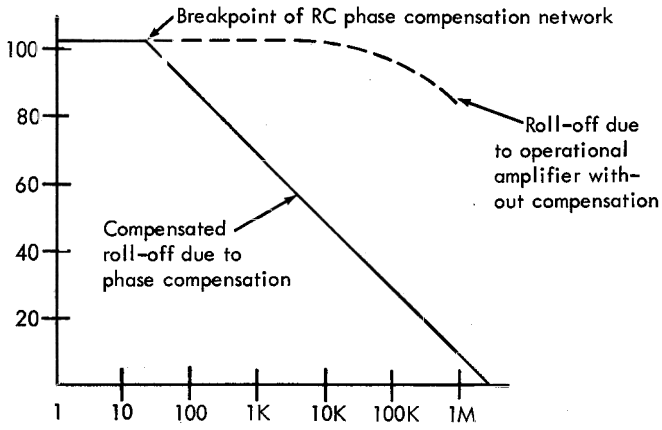

Fig. 35. The effect of internal phase compensation.

inherently stable, even under conditions of 100% feedback. As a consequence of internal compensation, the user may connect feedback around the amplifier with relative impunity. We must hasten to add, though, that each feedback condition is, in essence, a special case. Superior results may be obtainable by changing the internal compensation or by adding external components. A knowledge of the stability criteria and the Bode plot will be adequate in all but the most unorthodox circuits.

If compensation were not provided, certain amplifier circuits would be unstable under normal operating conditions according to the above "rate of closure" or change of slope principle. The effect of compensation on closed loop stability can be seen from the Bode plots of Fig. 36, showing several different closed loop amplifiers utilizing the same operational amplifiers with and without compensation.

Compensation Changes

The internal phase compensation may be changed easily in many Burr-Brown operational amplifiers simply by replacing the compensating resistor and capacitor. These two components are mounted physically for ease of replacement. The purpose in doing this is to increase the flatness of the response curve or "broadband" the amplifier circuit by changing the 3db break point frequency. The effect of broadbanding is shown in Fig. 37.

Broadbanding is accomplished simply by choosing a compensating capacitor which shifts the 3db breakpoint to the desired frequency. The resistor is

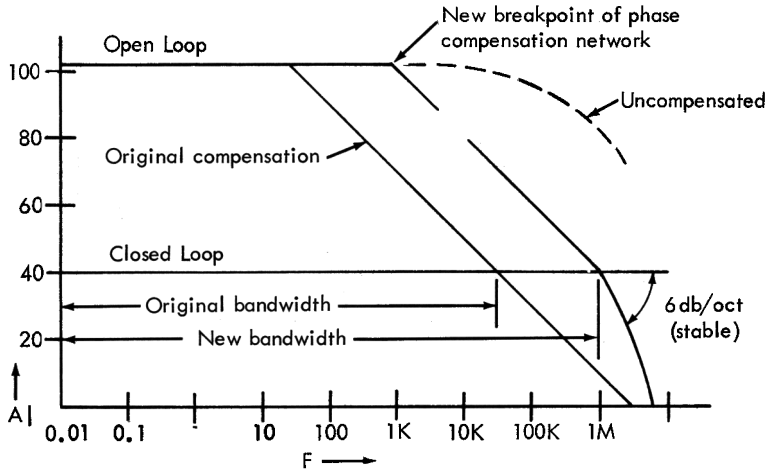

Fig. 37. The effect of broadbanding by changing the internal phase compensation.

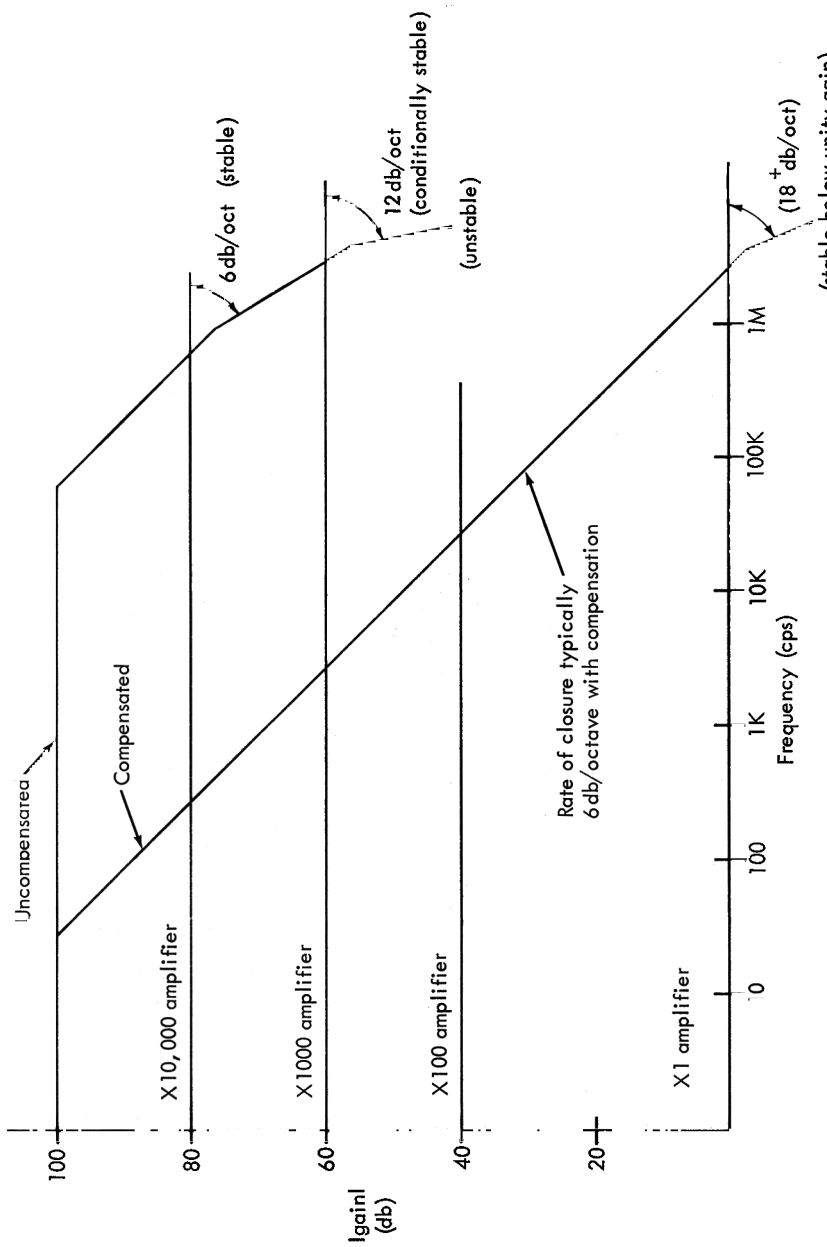

Fig. 36. Composite Bode plots showing stability provided by proper phase compensation.

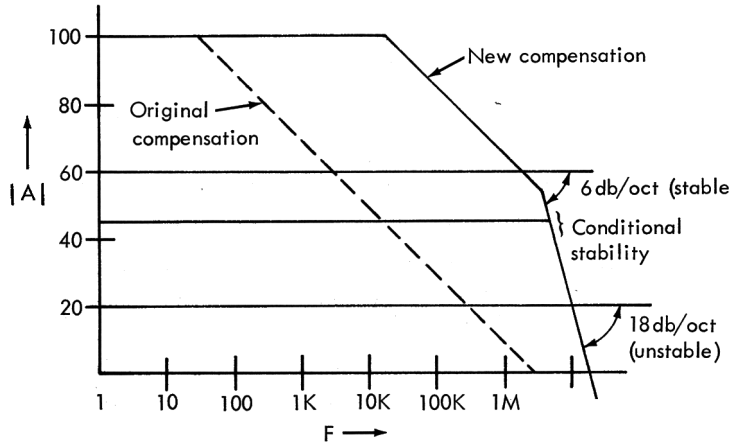

Fig. 38. Stability effects occurring when a broadbanded amplifier is used at gains other than the designed level.

then selected to break with the new capacitor at some frequency above the 3db point and tailor the high frequency response. The reactance chart (page 86) will be helpful in selecting component values.

The broadbanded amplifier may be used for any gain level above the originally designed gain value (by changing feedback components) but it may not be used for lower gains without readjusting the compensation. Instability will result since the rate of closure may be too large at low gain values (Fig. 38).

Bandwidth

The open loop bandwidth of the modern operational amplifier is shown explicitly in the Bode plot. The plot has only two distinguishing frequencies, one being the unity gain crossover frequency and the second being the 3db point. Either of these two can be considered the bandwidth of the open loop amplifier and used in open loop specifications.

The unity gain crossover frequency may be from 0.1 to 60Mcps or higher. An important aspect of bandwidth--besides making high frequency operational amplifier circuits practical--is to improve the precision of signal amplification. The loss of high frequency components of non-sinusoidal voltages such as pulses, control signals, DC steps, or even speech patterns may result in undesirable distortion and phase shift.

The ultimate purpose of wide bandwidth may be to maintain high loop gain at the lower signal frequencies. It may, for example, be necessary to use an operational amplifier with open loop bandwidth of 2Mc to provide a loop gain of 100db at 100 cps.

Loop Gain

As indicated in Fig. 34, loop gain is the gain "difference" between open and closed loop gain. In actuality, the loop gain is the ratio between open loop gain and closed loop gain since subtracting on the logarithmic gain scale is equivalent to division.

$$\text{Loop gain} = \frac{\text{open loop gain}}{\text{closed loop gain}}$$

In a practical circuit, loop gain is the increase in gain that is observed when the feedback path is opened, but with all circuit loads intact. Loading effects of finite input and output impedance, as well as the external feedback components, will lead to reduced loop gain. For example, in a unity gain inverting configuration, 6db is lost due to the voltage divider effect of the input and feedback resistors. Since the 3db point and roll off rate of the frequency response is fixed by the phase compensation network, the reduced gain effectively lowers the bandwidth. An inspection of Fig. 39 will clarify this effect.

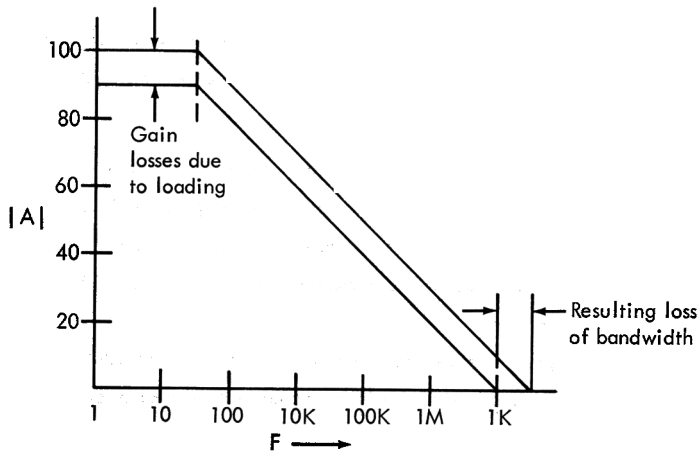

Fig. 39. Loss of high frequency response when heavy feedback is used (low closed loop gain).

The Significance of Loop Gain

Just as local degeneration around a transistor can reduce circuit sensitivity to certain parameter changes in that transistor, feedback around an operational amplifier will reduce sensitivity to open loop parameter changes. Open loop gain, phase shift, input impedance, and output impedance may vary with temperature, power supply voltage, and time. Loop gain is the payment made for circuit stability and gain accuracy, and it is a direct measure of the improvement obtained. The basic stability, however, must be designed into the open loop amplifier.

How Much Loop Gain?

While the amount of loop gain required is a function of the amplifier selected and the desired performance, a sample calculation will demonstrate the point. Suppose a 1% gain stability is desired using the Model 3003/15 over a ±10°C temperature range. The Model 3003/15 has open loop gain stability of .1db/°C or 1%/°C or 10%/10°C. Thus, the closed loop gain stability desired is 10 times better than the open loop gain stability available and at least 20db of loop gain is required.

Noise, drift, and offset will not be affected by loop gain. These parameters are essentially input functions which, like the signal, will be increased by the closed loop gain maintaining constant "signal to noise ratio" independent of gain. Loop gain will improve closed loop gain stability, phase shift, input impedance, and output impedance.

BODE PLOTS AND BASIC PRACTICAL CIRCUITRY

Voltage Follower

The unity gain follower and its Bode plot is shown in Fig. 40. Since there is no feedback impedance loading, the closed loop plot traces out the unity gain line to the open loop unity gain crossover before rolling off.

Inverter

A unity gain inverting amplifier is shown in Fig. 41. The bandwidth is decreased by one octave (50%) from that of the voltage follower due to the voltage division effect of the input and feedback resistors mentioned above.

X1000 Amplifier

Fig. 42 shows the Bode plot for either the inverting or non-inverting amplifiet with a gain of X1000 (60db). Negligible bandwidth is lost due to the

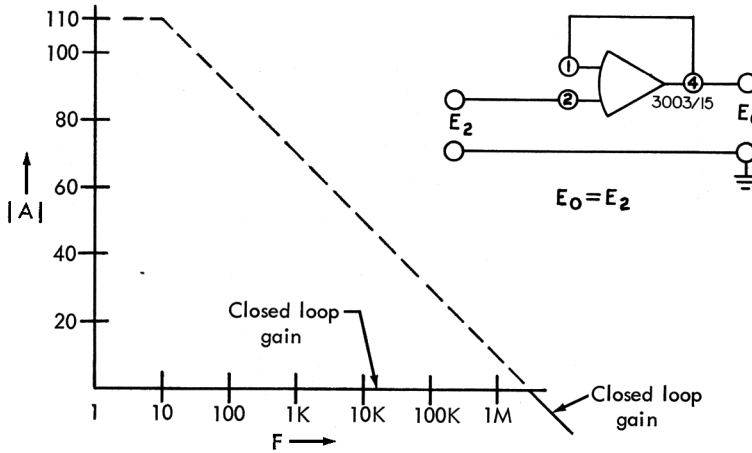

Fig. 40. Voltage follower circuit.

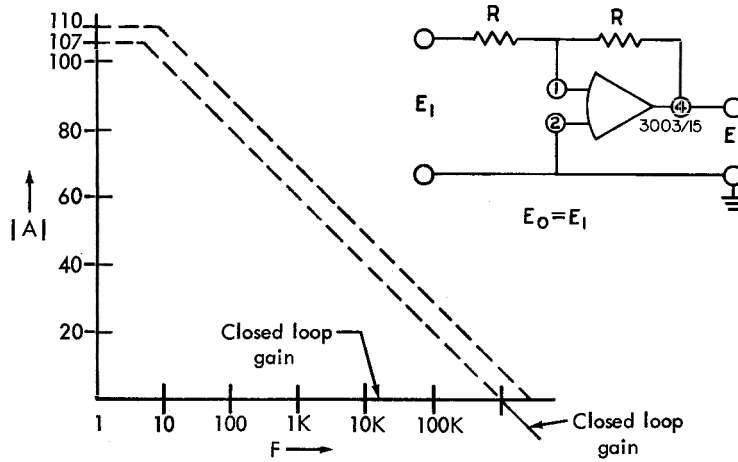

Fig. 41. Voltage inverter circuit.

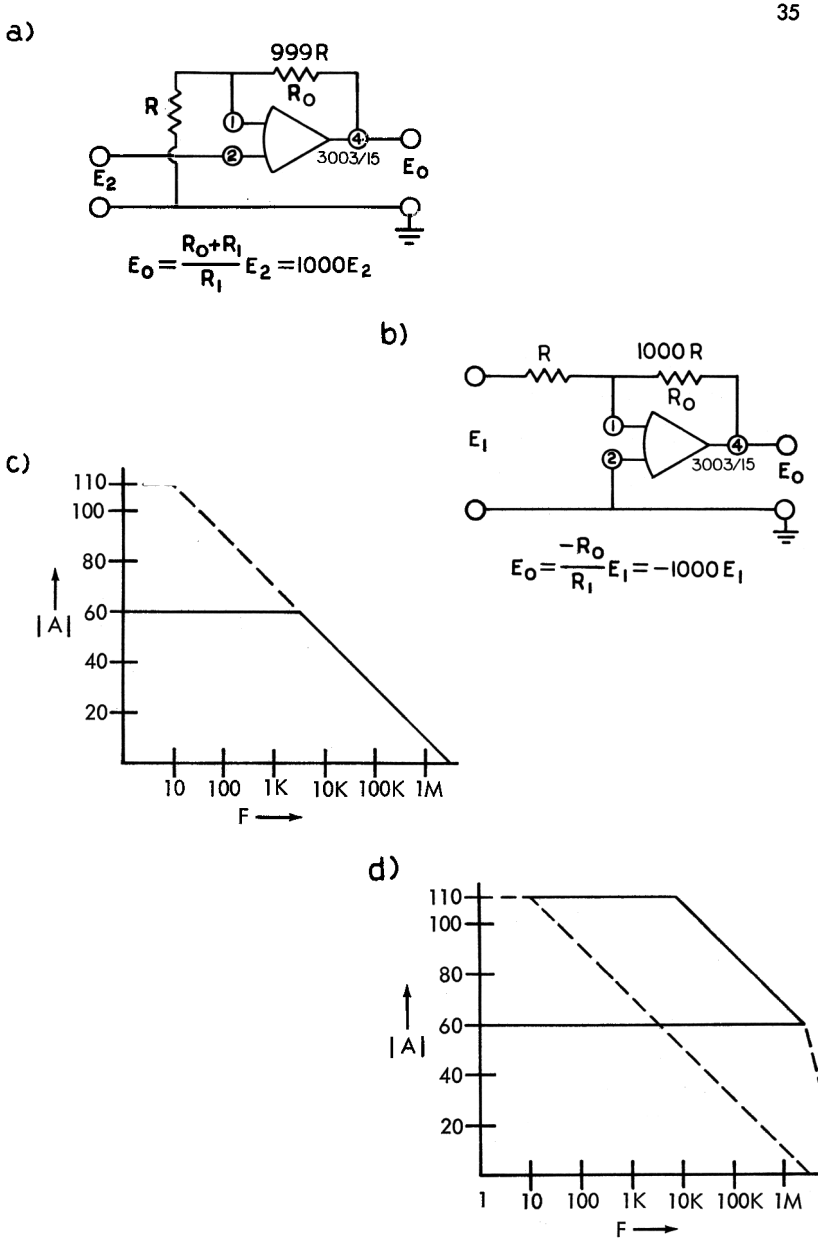

Fig. 42. a) and b) 60db amplifier circuits. c) Bode plot of 60db amplifiers. d) Bode plot of 60db amplifiers "broadbanded" by changing phase compensation.

voltage divider effect but is still very much reduced by the normal roll off of the open loop curve. This bandwidth may be partly restored by broadbanding as shown in Fig. 42d.

Differentiator

The Bode plot of the differentiator (Fig. 43) is slightly more trouble to construct since the Z_I value is dependent on frequency. It is evident that the curve must intersect the unity gain axis at the frequency where $X_c = R_o$ (conveniently found from the reactance chart on page 86). For DC, the capacitor represents infinite impedance, hence gain is zero. At higher frequencies, X_c drops and the gain increases, which is approximated closely by a straight line rising at 6db/octave.

Since highest gain is encountered at high frequencies, this circuit is very susceptible to random noise. Even more important, however, is the fact that the rate of closure is about 12db/octave, making the simple differentiator inherently unstable in operation. One practical method of reducing noise and preventing instability is shown in Fig. 44. At high frequencies, X_c is negligible and the circuit operates as an amplifier with resistive feedback. The transition "point" is the frequency at which $f = \frac{1}{2\pi R_I C_I}$. Note that a capacitor, C_o, in parallel with R_o,

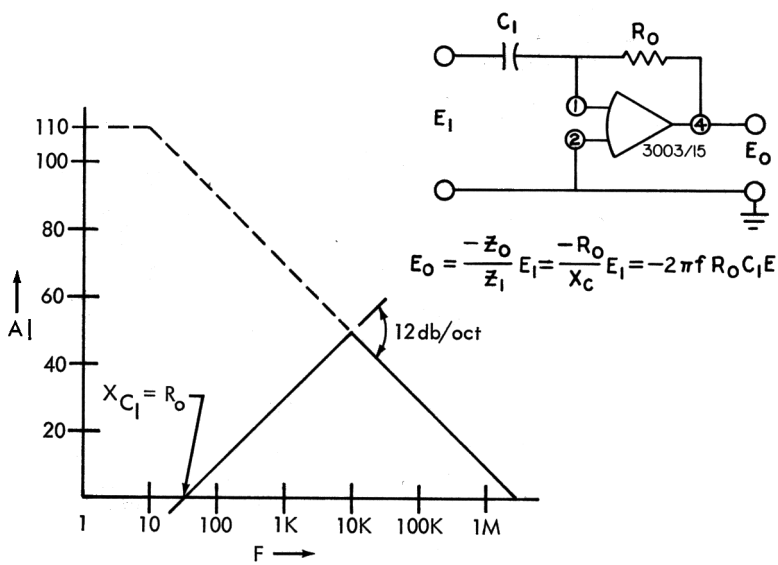

$$E_o = \frac{-Z_o}{Z_I} E_I = \frac{-R_o}{X_c} E_I = -2\pi f R_o C_I E_I$$

Fig. 43. Differentiator circuit.

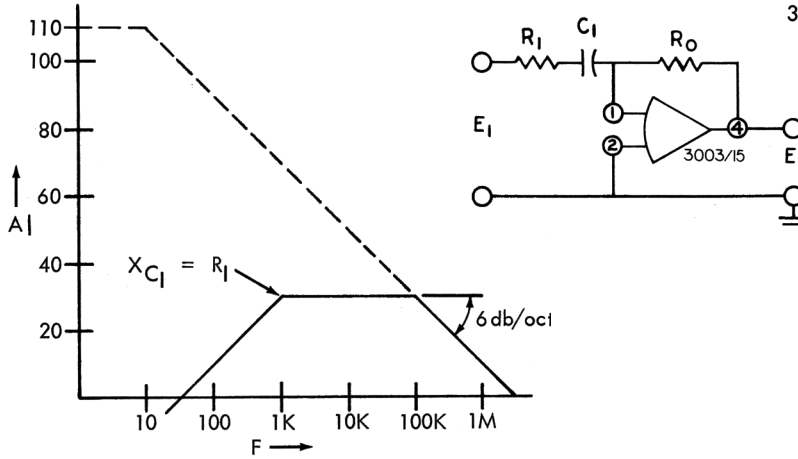

Fig. 44. Differentiator with "stop."

would have produced the same results with the significant frequency given by

$$f = \frac{1}{2\pi R_o C_o} .$$

Both techniques may be combined to give even better noise rejection (Fig. 45). With R_o and C_o set to break at the same frequency as R_I and C_I, the total slope change will be twice that of a single RC combination, hence a roll off of 6db/octave is introduced.

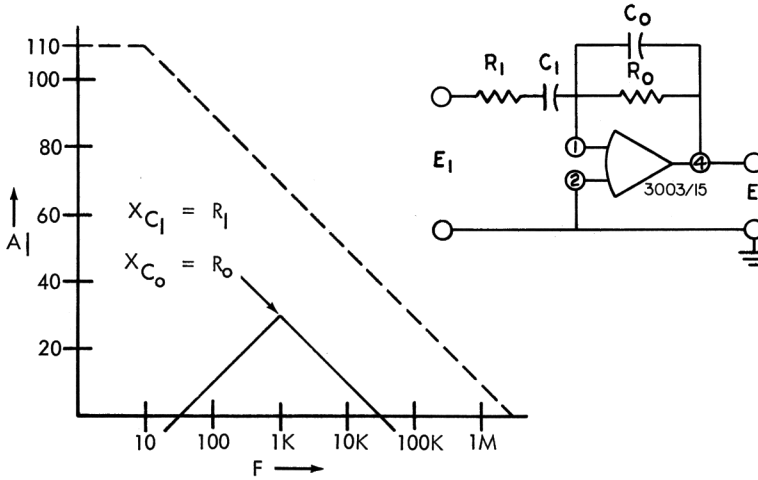

Fig. 45. Differentiator with "double stop."

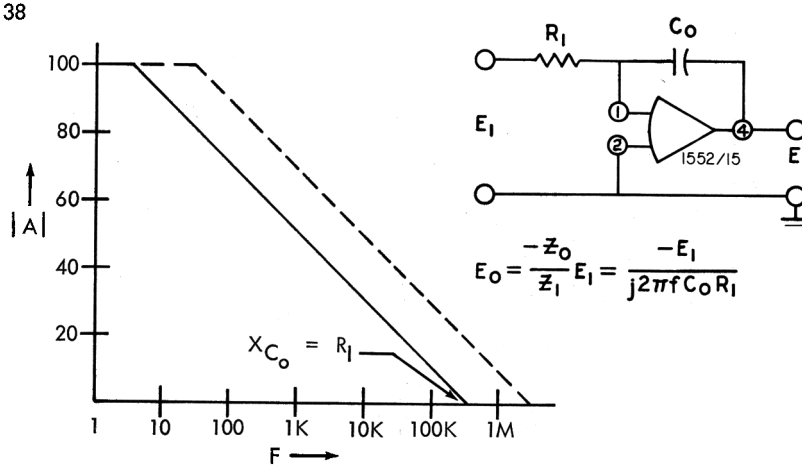

Fig. 46. Integrator circuit.

Integrator

The discussion above should make the Bode plot for an integrator simple to deduce (Fig. 46). Unity gain crossover occurs at the frequency where $X_{C_o} = R_I$. The slope is a negative 6db/octave and gain would ideally go to infinity at DC.

OTHER IMPORTANT PROPERTIES OF OPERATIONAL AMPLIFIERS

Summing Point Restraints

In the case of the ideal operational amplifier, circuit analysis was simplified by the ideal summing point restraints of zero voltage and zero current "at" the summing junction, pin (1). The real operational amplifier summing junction comes close to this, as will be shown in an example.

A typical Burr-Brown Model 3003/15 Operational Amplifier has a DC open loop gain of 110db or 300,000, open loop input impedance of 500K, and a saturation voltage of more than ±10 volts.

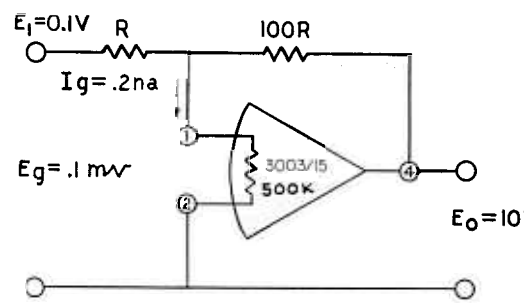

Fig. 47. DC summing point conditions.

For the circuit shown in Fig. 47 to have a full output of 10 volts,

the voltage at pin (1) must be

$$E_g \quad \frac{10}{\sim\sim\sim\ \sim\sim\sim} = 0.033\,\text{mv}$$

The current flowing to pin (1) is the voltage at pin (1) divided by the impedance to pin (2) which is Z_{in} open loop and available from the specification sheet.

$$I_g = \frac{0.033\ \text{mv}}{500\text{K}} = 0.67 \times 10^{-10}\ \text{amps} = .067\ \text{na}$$

Note that these calculations do not depend on the values of the feedback and input elements. In fact, they don't depend on the nature of the closed loop circuit at all so long as the operational amplifier is not operating in an overload condition.

Since the dynamic voltage current variations which appear at the summing junction of a real operational amplifier in a closed loop circuit are so small, they are considered zero--as in the ideal case--for circuit analysis purposes. It must be noted, however, that this effect is due to the high open loop gain of the operational amplifier. At high frequencies, the open loop gain falls off and the summing point voltage and current increases accordingly for the same output. Also, the static effects of input voltage and current offset as well as drift must be taken into account. These will be discussed more fully later.

Closed Loop Impedance Levels

Open loop output impedances are given in the specifications and range from 3 ohms to 5000 ohms, with the majority of operational amplifiers having a 100 or 200 ohm open loop output impedance. Since the input and feedback resistors usually will vary from 1Kohm to 1Megohm, this may represent a rather poor approximation of the ideal zero output impedance. However, as we shall see, the equivalent closed loop output impedance is typically less than an ohm.

Open loop input impedances are also specified and run from 0.1 Megohm to 5 Megohms. Compared to the typical feedback impedance levels, this also seems a very poor approximation of the ideally infinite, open loop input impedance. Practically, this is of little importance since the closed loop input impedance of the inverting amplifier is determined by the input resistor. Calculations will show that the equivalent input impedance of the non-inverting amplifier may be hundreds or thousands of Megohms, closed loop.

Output Impedance

Using the Model 3003/15 as a voltage follower in the circuit of Fig. 48, we can readily determine the effective closed loop output impedance. Loading this circuit with an incremental output current, ΔI_L, forces the amplifier output, e_o, to increase by:

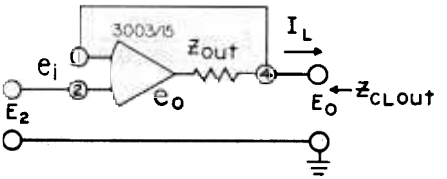

Fig. 48. Voltage follower.

$$\Delta e_o = \Delta I_L Z_{out} .$$

To maintain this Δe_o, the voltage across pins (1) and (2) must change by:

$$\frac{\Delta e_o}{A}$$

Since pin (1) is tied to the output and the input voltage, E_2, is applied to pin (2), E_o must decrease by Δe_i. The effective output impedance is then seen to be:

$$\frac{\Delta E_o}{\Delta I_L} = \left(\frac{\Delta e_o}{A}\right) \left(\frac{Z_{out}}{\Delta e_o}\right) = \frac{Z_{out}}{A} .$$

Thus, for the Model 3003/15, the open loop output impedance of 5000 ohms is decreased by the DC gain of 300,000 to an effective .017 ohm at the output plus any lead impedance between the feedback point and the load.

More general calculations would show that the output impedance is reduced by the loop gain. The voltage follower is a limiting case in which the loop gain is equal to the open loop gain. Thus, the Model 3003/15 will exhibit less than one ohm of closed loop output impedance so long as loop gain is greater than 67 db.

Input Impedance

Closed loop input impedance is also increased by loop gain in non-inverting closed loop applications. In the inverting or summing closed loop configuration, the summing junction is a virtual ground and the input impedance is almost exactly the value of the summing impedance, Z_I.

In Fig. 49, the Model 3003/15 is again shown in the voltage follower circuit with the open loop input impedance, Z_{in}, indicated. For any change in output voltage, ΔE_o, the voltage across pins (1) and (2) must change by ΔE_o divided by the open loop gain, A:

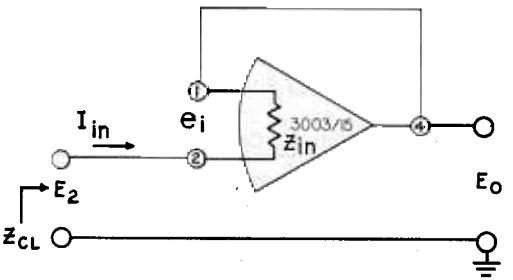

Fig. 49. Voltage follower.

$$\Delta e_i = \frac{\Delta E_o}{A} = \frac{\Delta E_2}{A}$$

The change of voltage, Δe_i, across the open loop input impedance, Z_{in}, demands a current, ΔI_{in}, equal to Δe_i divided by Z_{in}.

$$\Delta I_{in} = \frac{\Delta e_i}{Z_{in}} = \frac{\Delta E_2}{AZ_{in}}$$

The closed loop input impedance, $Z_{CL\ in}$, is the change in input voltage, ΔE_2, divided by the change in input current, ΔI_{in}.

$$Z_{CL\ in} = \frac{\Delta E_2}{\Delta I_{in}} = \Delta E_2 \left(\frac{AZ_{in}}{\Delta E_2}\right) = AZ_{in}.$$

Again, this is a limiting case in which the loop gain is equal to the open loop gain. In the more general case, the effective input impedance is equal to the open loop input impedance multiplied by the loop gain. Thus, assuming zero offset currents, the input impedance of the Model 3003/15 is greater than 50 Megohms as long as loop gain is greater than 40db. Current leakage paths associated with the input stage tend to limit the input impedance to be achieved in this manner to about 50 Megohms.

Increasing Input Impedance

The input impedance of many operational amplifier circuits may be increased by a technique known as "bootstrapping." Output voltage of the same polarity as the input voltage (as from the non-inverting amplifier or two inverting amplifiers in tandem) is used to inject a current into the input which is equal to the current drawn from the driving source. When this is done, the source no longer has to supply any

current, and input impedance is effectively infinite. Techniques for bootstrapping vary with the type of circuit used. Examples of bootstrapping will be found in the circuits at the end of this handbook.

Differential Inputs and Common Mode Rejection

The input to most Burr-Brown Operational Amplifiers is a pair of leads, neither of which is connected to ground. Such a pair of "floating" input connections are termed differential inputs. Each input connection drives separate, balanced transistor amplifiers. Ideally, the same voltage connected to each input would produce no net result, hence the operational amplifier would only detect the difference in the two input voltages. The voltage which both inputs experience is known as the common mode voltage.

In practice, the voltages on each input are amplified separately and, due to component variations, never perfectly balance out to zero. The "common mode rejection" property of a differential input amplifier also depends on the feedback configuration of the closed loop application.

The Common Mode Voltage Limit

As stated above, the circuitry within the operational amplifier responds to the voltages appearing at the two inputs separately. Either input can be overdriven, saturating the input transistor(s). Since under normal feedback conditions there is only a negligible difference in voltage between the two inputs (see "Summing Point Restraints"), the input saturation voltage is known as the common mode voltage limit and appears in Burr-Brown specifications.

For the inverting amplifier, one input terminal is grounded; hence, the common mode input voltage is zero. In the non-inverting configuration, however, an equal voltage appears at both input terminals and the common mode limit must be observed.

Offset

It was mentioned earlier that a certain input voltage is necessary to balance the operational amplifier circuit. This input voltage is needed because of a small bias current and voltage inherently required by the operational amplifier, called offset. When these two bias components are not externally supplied, they are drawn from the input and feedback networks causing an output voltage error.

In many applications, this small error is negligible. For highest performance, there are built-in controls on many Burr-Brown operational amplifiers, or

simple biasing circuits may be used externally. As an example, the current components of input offset may be corrected by a simple bias current injector as shown in Fig. 50.

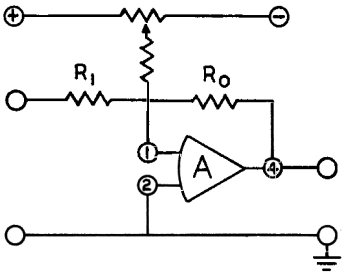

Fig. 50. Inverting amplifier with current offset control.

Drift

The bias values mentioned above will vary with temperature, time, and power supply voltage, producing a variable output error or drift. Again, this effect is negligible in many cases, but it should be taken into account in critical applications.

The most straightforward method is to readjust the internal or external controls mentioned above at intervals compatible with the accuracy desired. This may mean twice a day, or before each precision measurement. Environmental temperature control is used in some cases to reduce drift.

In some Burr-Brown Operational Amplifiers, input connections are made directly to the bases of a matched pair of input transistors. Thus, variations in base current and emitter to base voltage caused by external changes, i.e. temperature, will tend to cause both input transistors to vary in the same direction. Since the base currents must flow to ground through the external feedback network, drift effects can be minimized by: (1) using the lowest resistance levels consistent with input impedance requirements and output current capability; and (2) balancing the resistances from the two inputs to ground. For the amplifier shown in Fig. 51, this latter consideration is satisfied by connecting a resistor from pin (2) to ground equal to the equivalent resistance from pin (1) to ground.

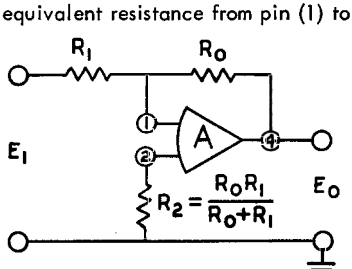

Fig. 51. Drift stabilizing the inverting amplifier.

Capacitive Loading

The addition of capacitive reactance shunting the load of an operational amplifier may lead to peaking and finally instability at high frequencies. The capacitive load tends to break with the output impedance of the amplifier causing the slope of the open loop response to increase. As the rate of closure

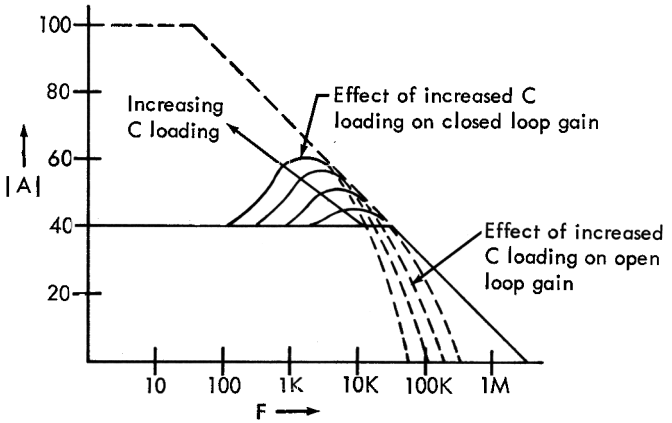

Fig. 52. Gain peaking caused by capacitive loading.

approaches 12db/octave (see "Stability" above), the closed loop response begins to peak and possibly oscillate (Fig. 52). This problem is most severe at low gain levels and at high frequencies.

SECTION II

CIRCUIT COLLECTION

A search of literature in the field and Burr-Brown's seven-year collection of application notes turned up the circuits presented in this section. They have been grouped by general function and ordered within each group by increasing complexity. It is our hope that one of these will trigger the idea that develops into your circuit.

Please do not interpret any one circuit as our recommendation for your requirement. Some of them, due to their simplicity or specialized nature, may perform only over limited ranges and under controlled conditions. We would welcome the opportunity to suggest a specific circuit for you, given the details of your application.

VOLTAGE DETECTORS AND COMPARATORS

Inputs are of two types. The reference and input voltages may be connected to separate input terminals in which case E_{ref} is the actual threshold voltage and cannot exceed the common mode input voltage limit for the operational amplifier. The reference and input both may be connected through input resistors to the inverting input allowing E_{ref} to be any convenient voltage opposite in polarity to the signal voltage. Threshold voltage is set by scaling the input resistors.

Outputs may be saturation limited or may be clamped to the desired value.

In all cases, the input must swing past the threshold voltage by an amount equal to the output voltage divided by the open loop gain of the operational amplifier.

Saturation-Saturation - simple, but relatively slow response

E_o = + saturation (+10v), $E_I < E_t$

E_o = - saturation (-10v), $E_I > E_t$

$E_t = E_{threshold} = E_{ref}$

E_I and E_{ref} may be reversed to change polarity of output

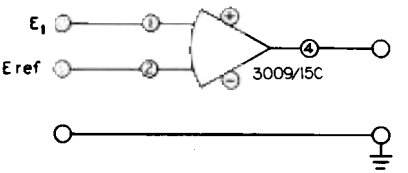

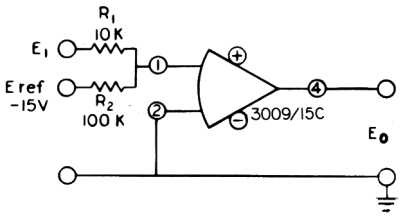

E_o = + saturation, $E_I < 1.5v$

E_o = - saturation, $E_I > 1.5v$

$$E_t = -E_{ref}\frac{R_I}{R_2} = +1.5v$$

Single-Swing - simple output clamping

E_o = + saturation, $E_I < 1.5v$

E_o = 0, $E_I > 1.5v$

Reversing diode gives 0, - saturation output

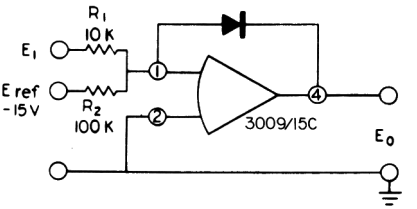

Hysteresis - output stability or decrease in sensitivity.

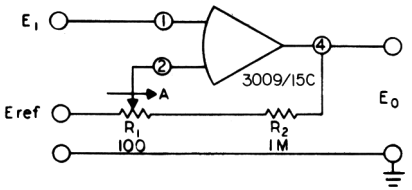

E_o = + saturation, $E_I < E_{ref} - A$

E_o = - saturation, $E_I > E_{ref} + A$

Potentiometer or fixed resistors may be used.

Half Swing - single output clamping.

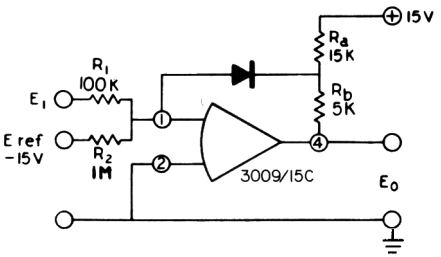

E_o = + saturation, $E_I < .5$

E_o = -5, $E_I > 1.5$

$$\text{Clamped output} = \frac{-E_b R_b}{R_a} = -5 \text{ volts}$$

Reversing diode and E polarity give +5, - saturation swing

Voltage Comparator - fully clamped.

E_o = - 10, $E_I > 1.5$

E_o = 3, $E_I < 1.5$

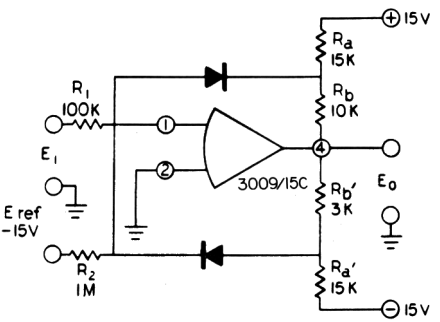

BUFFERS AND ISOLATION AMPLIFIERS

The standard inverting and non-inverting amplifier circuits provide impedance isolation due to their inherently low equivalent output impedance. The following circuits are designed principally for isolation and not for providing gain.

Voltage Follower - precision voltage source isolation, maximum common mode voltages must be limited to specified values.

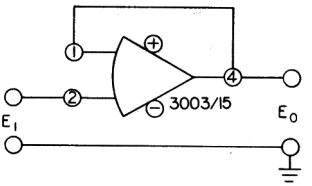

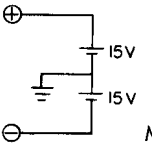

$E_o = E_1$

Model	DC Gain	Z_{in} @ 1 volt
3003/15	0.99999	> 50 Meg Ω
1552/15	0.9999	> 10^{11} ohms

Inverting Buffer - adjustable gain.

$E_o = -E_I$

$Z_{in} = 10K$

$Z_{out} = 1\Omega$

Potentiometer in feedback allows gain trimming to compensate for tolerance in resistor values (30Mc with 1560/25 and 1 Kohm external resistors).

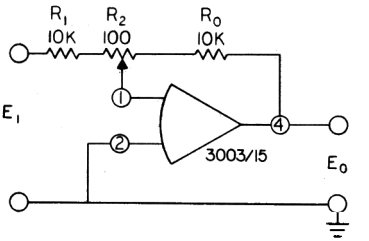

Balanced Output - for driving balanced loads or push-pull stages when ground reference is critical.

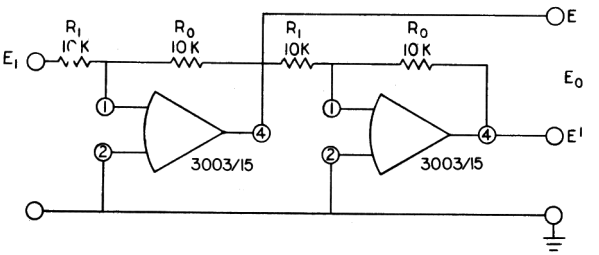

$E' = E_I$

$E = -E_I$

$E_o = E - E' = -2E_I$

By using E' terminal at the reference, a p-p swing of $4E_I$ is obtainable at E, i.e. a usable swing of 40 volts P-P with a ±15 volt power supply.

Differential Output - similar to above but provided in a single module.

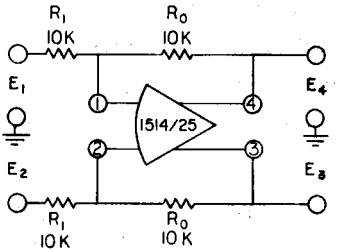

$$E_3 = \frac{R_o}{2R_1}(E_1 - E_2)$$

$$E_4 = \frac{-R_o}{2R_1}(E_1 - E_2)$$

$$E_{3-4} = -\frac{R_o}{R_1}(E_1 - E_2)$$

High Input Impedance - DC - Z_{in} falls with frequency giving equivalent shunt input capacitance.

Model	Z_{in}
3003/15	> 1000 Meg Ω, 10pf

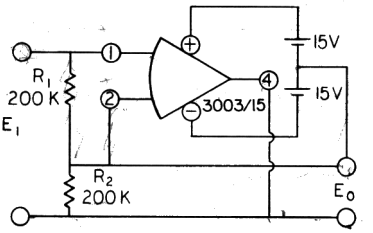

High Input Impedance - AC - same as above with input and by-pass capacitors to give improved high frequency operation.

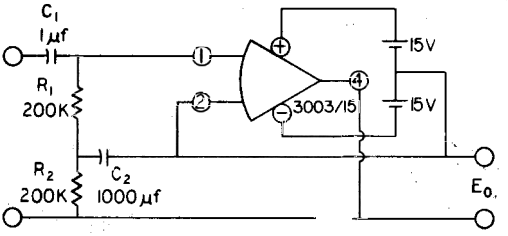

Wide Band - high speed. 30Mc response at unity gain.

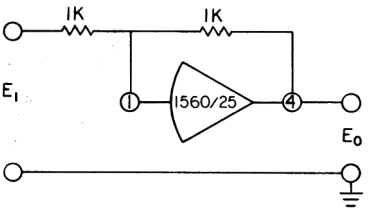

VOLTAGE AND CURRENT REFERENCES

The high input impedance and low output impedance levels which can be obtained with the precision and stability of operational amplifier circuitry make reference supplies practical. Some circuits are merely reference cells or zener diodes with isolator and multiplying circuits added. Others use the "bootstrap" technique to raise the impedance level seen by the reference to theoretical values approaching infinity.

Isolated Standard Cell - Prevent damage to standard cells induced by drawing current from them with low impedance (20K/volt) measuring devices. See section on Buffers and Isolators for gain error. Offset adjustments should not be made with standard cell connected

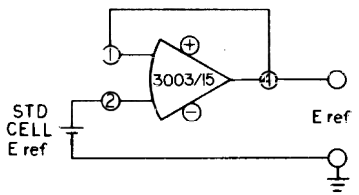

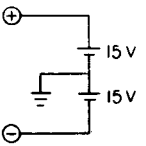

Constant Current Generator - convenient current reference up to 20ma

$$= \frac{V_z}{R_2} = \frac{6}{300} = 20\text{ma}$$

$$R_1 = \frac{15 - V_z}{I_z \text{ max.}} = \frac{9}{25\text{ma (nom)}} = 0.36\text{K}$$

$$R_{L\ \text{min.}} = \frac{\text{Saturation Voltage}}{I} = \frac{10\text{v}}{20\text{ma}} = 500\Omega$$

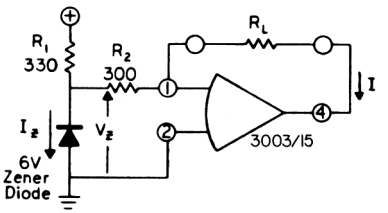

Buffer Variation - Low current drift of chopper stabilized amplifiers improves stability and cell protection.

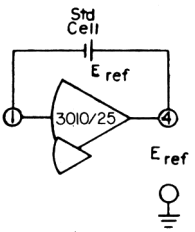

Presettable Voltage Source - Gives wide range of very stable reference voltages.

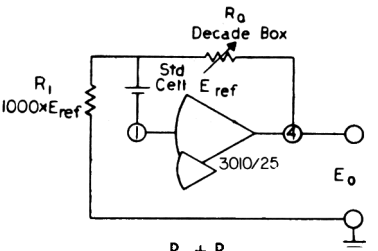

$$E_o = \frac{R_1 + R_o}{R_1} E_{ref}$$

Reference Voltage Supply - Positive and negative output with very high input impedance.

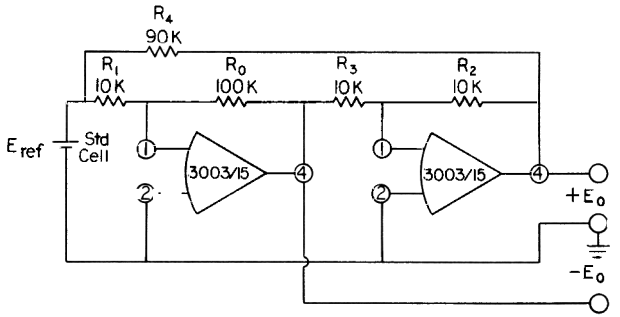

$E_o = \frac{R_o}{R_1} E_{ref} = 10\ E_{ref}$ Add 1520/15 for 100ma output.

$R_4 = R_o - R_1$ for "infinite input impedance." Should be trimmed for best results.

INTEGRATORS

Simple integrator circuits operate successfully but current offset is stored in the feedback capacitor causing output voltage error. This is corrected with low drift chopper stabilized amplifier and/or current biasing networks.

Simple Integrators -

$$E_o = \frac{-\int E_1 dt}{R_1 C_o} = -10 \int E_1 dt$$

Close switches to reset to zero.

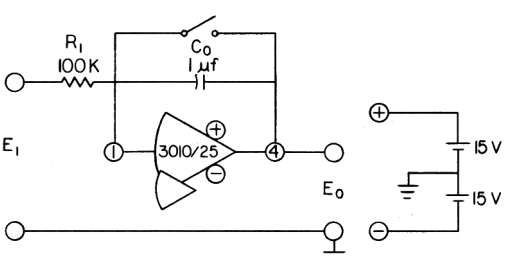

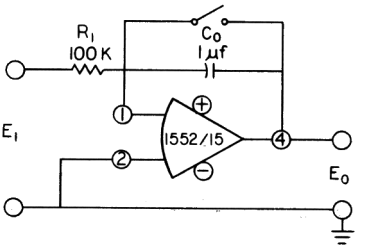

Model	E_o max.
1543/15	±20v
1552/15	±10v

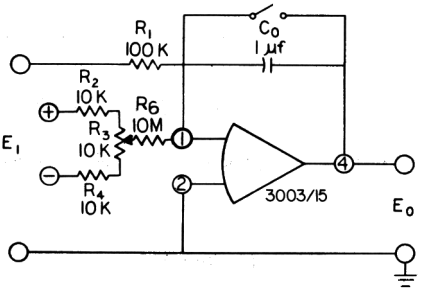

This circuit reduces current offset in operational amplifiers without "Bal" controls. With zero input and switch open, set R_3 for zero output drift.

Regeneration - may be used to increase open loop DC gain to infinity.

(1) With input open and regeneration control R_5, in approximate center of its range, open reset switch and adjust zero control, R_8, until output remains at zero.

(2) Open reset switch, short input and adjust 3003/15 internal "BAL" control for zero drift.

(3) Apply an input signal of either polarity and allow integrator to run up to some voltage between ±10v DC, then open circuit signal input.

(4) If integrator output decays toward zero, increase regeneration by increasing R_5. If output continues to grow, decrease regeneration.

(5) If setting of regeneration control is altered, repeat steps (1) and (2) above.

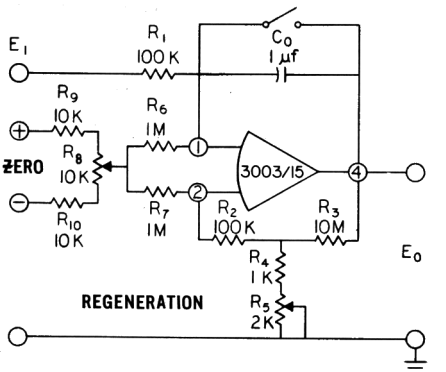

Summing Integrator - one amplifier replaces separate summer and integrator circuits.

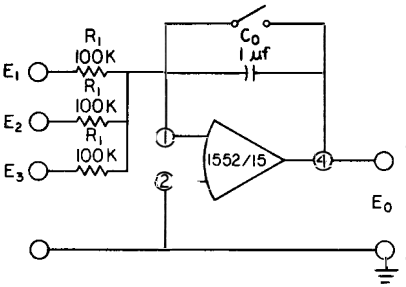

$$E_o = \frac{-1}{R_1 C} \int (E_1 + E_2 + E_3)\, dt$$

$$= -10 \int (E_1 + E_2 + E_3)\, dt$$

Any number of inputs may be used.

Zero control and regeneration may be added as in the above circuit.

Double Integrator - integrates twice with one amplifier.

$$C_o = \frac{C_1}{2} \qquad R_o = \frac{R_1}{2}$$

$$E_o = \frac{-4}{(R_1 C_1)^2} \iint E_1 dt = -4 \iint E_1 dt$$

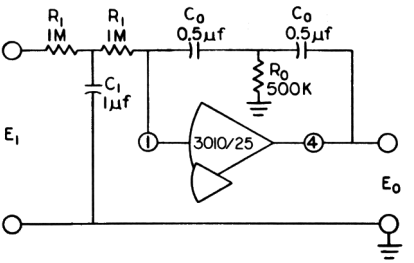

Differential Integrator - integrates difference between two signals.

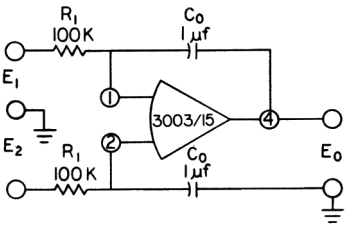

$$E_o = \frac{-1}{R_1 C_o} \int (E_1 - E_2)\, dt$$

$$= 10 \int (E_2 - E_1)\, dt$$

AC Integrator - integrates AC component only.

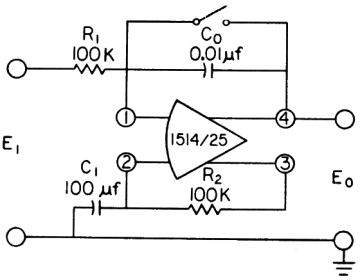

$$E_o = \frac{-1}{R_1 C_o} \int E_1 dt = -1000 \int E_1 dt$$

Augmenting Integrator - sums the input signal and its time integral.

$$E_o = \frac{-R_o E_1}{R_1} - \frac{1}{C_o R_1} \int E_1 dt$$

$$-10\, E_1 - \int E_1 dt$$

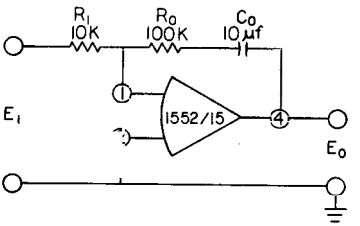

DIFFERENTIATORS

The ideal differentiator circuit is not generally usable in its simple form. It is susceptible to high frequency noise which may be greater than the derivative output. Design should include high frequency response limiting.

With "Stop" - input resistor sets high frequency cutoff.

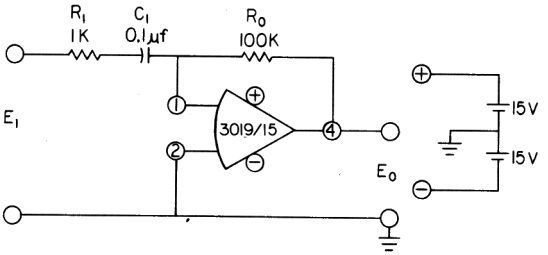

$$E_o = -R_o C_1 \frac{dE_1}{dt}$$

$$= \frac{-1}{100} \frac{dE_1}{dt}$$

high frequency cutoff $F_o = \frac{1}{2\pi R_1 C_1} = .6kc$

low frequency cutoff $F_1 = \frac{1}{2\pi R_o C_1} = 16cps$

Low Noise - double high frequency cutoff

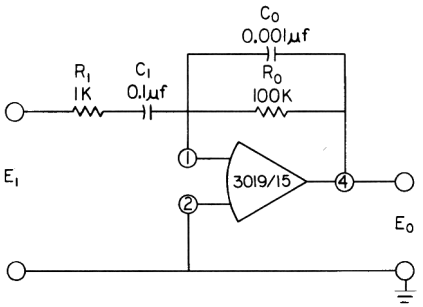

$R_1C_1 = R_oC_o$

drift compensating resistor

Augmented Differentiator - sums input and its derivative

$$E_o = \frac{-R_oE_1}{R_1} - R_oC_1\frac{dE_1}{dt}$$

$$E_o = -E_1 - \frac{1}{100}\frac{dE_1}{dt}$$

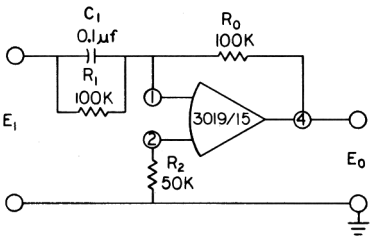

DC AMPLIFIERS

There are two basic circuits, inverting and non-inverting, plus the differential output form. For a fixed or specific minimum gain application, bandwidth may be increased by a simple modification of the operational amplifier. (See Phase Compensation.)

Simple Inverting - sign changing amplifier

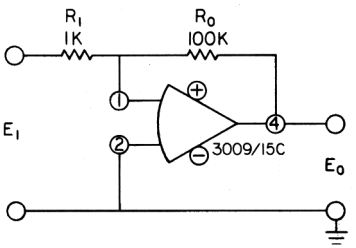

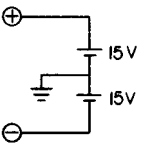

$$E_o = \frac{-R_o}{R_1}E_1 = -100E_1$$

$$\text{resistor} = \frac{R_oR_1}{R_1 + R_o} = 1K$$

$$Z_{in} = R_1 = 1K$$

Chopper Stabilized - improved drift and stability.

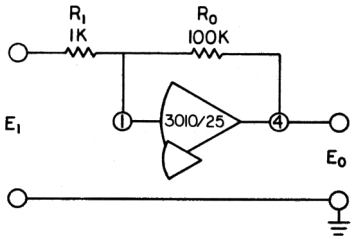

$E_o = -100E_I$

Simple Gain Control - wide range or attenuation.

Unity gain with R centered and increases to left.
Gain not linear with R setting.
Z_{in} drops as gain is increased.

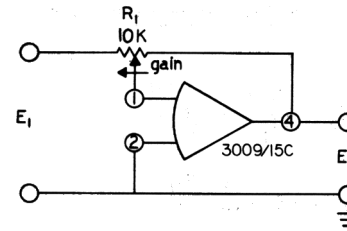

Linear Gain Control

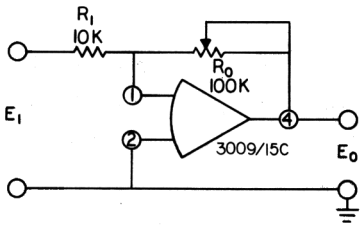

Variable from 0 to 10

$E_o = 0$ to $-10E_I$

$Z_{in} = R_I = 10K$

Simple Non-Inverting - input common mode voltage limit must be observed.

$$E_o = \frac{R_o + R_I}{R_I} E_I = 10E_I$$

Z_{in} >50 Megohms

Z_{out} < 1 ohm

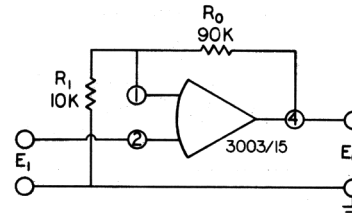

Gain controls and/or trimming may be accomplished as in the variations on the inverting amplifier above.

Power Booster - output current of any of the above circuits may be increased by the addition of a power booster. The operational amplifier-booster combination is substituted directly for the original operational amplifier.

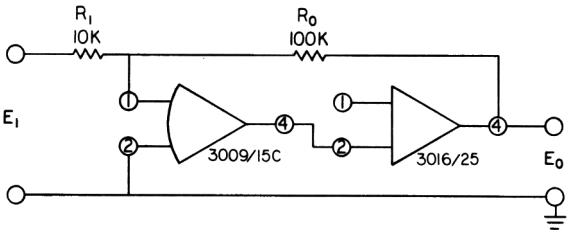

Model	Output
3016/25	± 10v @ 200ma

Differential Output - for driving floating load.

$$E_o = \frac{R_o}{R_1} E_1 = 10E_1$$

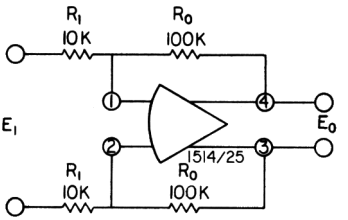

Gain Control - equivalent to replacing both resistors in the non-inverting amplifier by a single potentiometer.

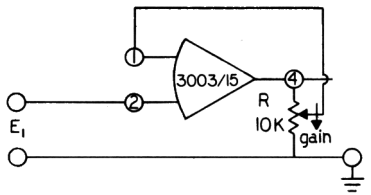

E_o = (1 to infinity) E_1

Z_{in} = 50Meg

Observe common mode voltage limit.

Inverting Gain Control - convenient gain technique

E_o = (-1 to - infinity) E_1

Z_{in} = 10K

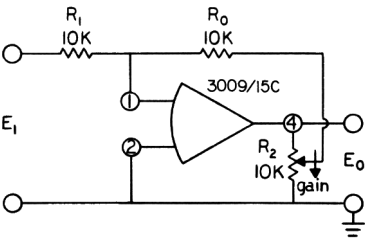

Buffer - 10^{11} Ω input impedance circuit.

$$E_o = \frac{R_o + R_1}{R_1} E_1 = 10E_1$$

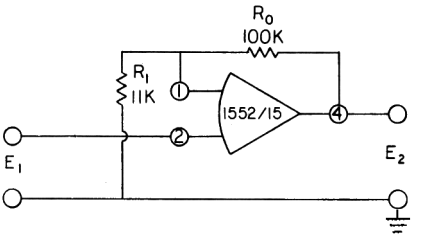

DIFFERENTIAL AMPLIFIERS

In differential amplifiers, separate input signals are applied to the differential inputs of the operational amplifier. The result is direct subtraction in contrast to the summing amplifier which adds algebraically.

Subtractor - direct subtraction of two inputs.

$$E_o = E_2 - E_1$$

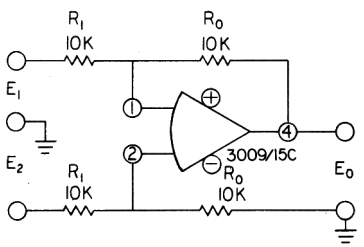

Difference Amplifier - subtractor with amplification.

$$E_o = \frac{-R_o}{R_1} (E_1 - E_2) = 100 (E_2 - E_1)$$

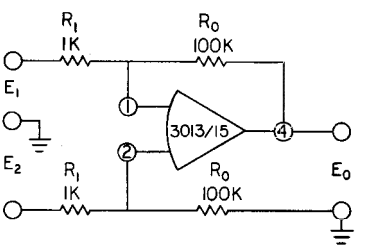

Common Mode Rejection - subtraction by inverting and summing to eliminate common mode voltage.

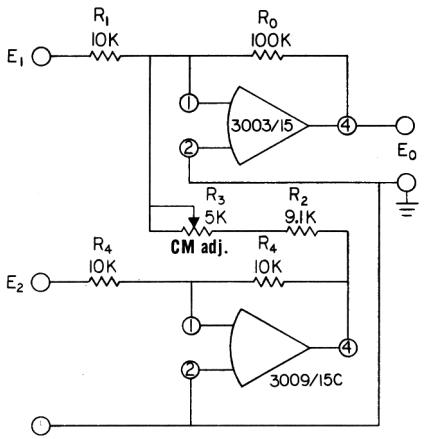

$$E_o = \frac{-R_o}{R_1}(E_1 - E_2) = 10(E_2 - E_1)$$

$$R_2 + R_3 = R_1$$

R_3 - common mode adjustment set for Zero output when $E_1 = E_2$.

Differential Input-Output - for use in driving floating loads.

$$E_o = \frac{R_o}{R_1}(E_2 - E_1) = 10\,(E_2 - E_1)$$

Input may be floating source.

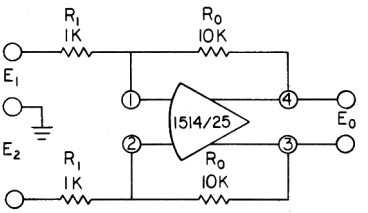

SUMMING AND AVERAGING AMPLIFIERS

Voltages are summed by applying the signals to the same input of the amplifier. Amplifying, averaging, etc., may be accomplished by input resistor scaling. Inputs are effectively isolated from each other. Any number of inputs may be used in each of these circuits.

Adder - output is inverted algebraic sum of inputs.

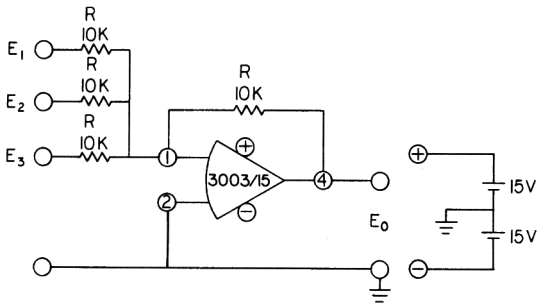

$E_o = -(E_1 + E_2 + E_3)$

Z_{in} = 10K for each input

Scaling Adder - each input is multiplied by a constant before summing-inverting output.

$$E_o = -\left(\frac{R_o}{R_1}E_1 + \frac{R_o}{R_2}E_2 + \frac{R_o}{R_3}E_3\right)$$

$$= -(100E_1 + 10E_2 + E_3)$$

Z_{in} = 1K for E_1

= 10K for E_2

= 100K for E_3

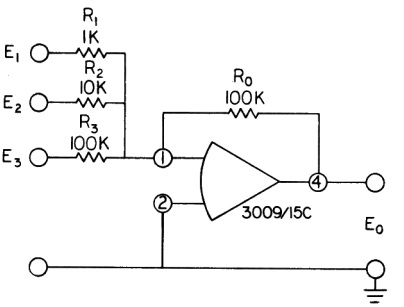

Direct Addition - non-inverting output.

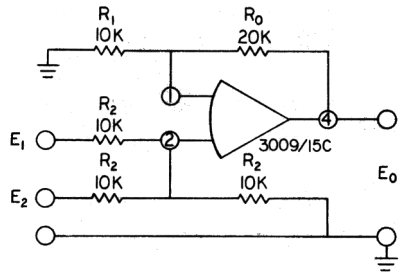

$E_o = E_1 + E_2$

$Z_{in} = \frac{3}{2}R_2 = 15K$ for each input

$R_o = 2R_1$

Adder Subtractor or Floating Input Combiner - as an adder-subtracter, unused inputs should be grounded.

$E_o = -E_1 - E_2 + E_3 + E_4$

R and R_1 not necessarily equal

Two or more "floating" inputs may be combined by connecting them across E_3 to E_1 and E_4 to E_2.

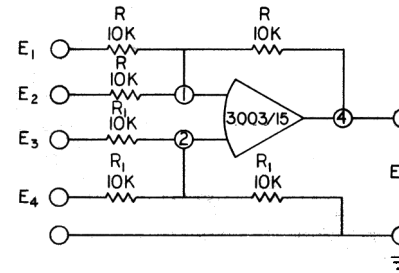

Averager - output is inverted average of input signals. Ground unused inputs to preserve scale.

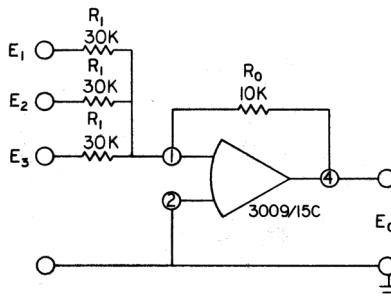

$$E_o = \frac{-R_o}{R_1}(E_1 + E_2 + E_3) = -\frac{E_1 + E_2 + E_3}{3}$$

$R_o = R_1$ divided by number of inputs

Weighted Average - each input is multiplied by a weighting factor before averaging.

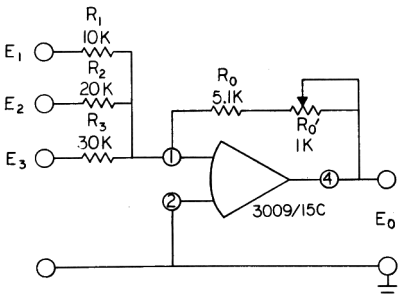

For $E_1 = E_2 = E_3$, set R'_o so $E_o = E_1$

Then, $R_o + R'_o = R_1 \| R_2 \| R_3$

$$E_o = \frac{-(R_o + R'_o)E_1}{R_1} - \frac{(R_o + R'_o)E_2}{R_2} - \frac{(R_o + R'_o)E_3}{R_3}$$

$$= \frac{-(16.4E_1 + 8.2E_2 + 5.4E_3)}{30}$$

AC AMPLIFIERS

DC Amplifiers with Blocking Capacitors

AC operational amplifier circuits will amplify low frequency signals which are below the range of more conventional amplifiers (0.1cps to 20cps) while DC blocking still is present. High-gain open loop operation is practical. Only a single ended supply is required in one circuit. DC and AC operational amplifier circuits are equivalent at higher frequencies.

Simple Amplifier - simple RC roll off at low frequency.

$$E_o = -\frac{R_o}{R_1} E_1 = -10E_1$$

Low frequency rolloff begins

$$= \frac{1}{2\pi R_1 C_1} = 16\text{cps}$$

$Z_{in} = 10K$

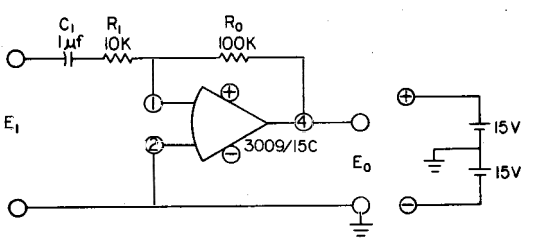

Single Supply - equivalent to above with the supply "floated" above ground.

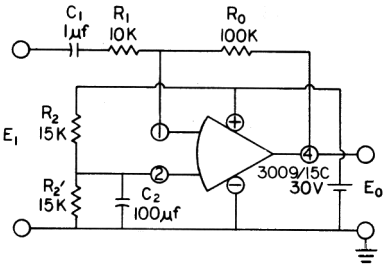

C_2 - AC bypass

High Gain - AC open loop operation

Low frequency rolloff begins at 1Kc

(where $\frac{X_{C_1} + R_o}{X_{C_1}}$ = open loop gain)

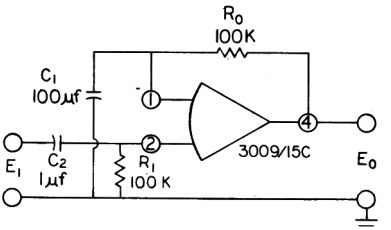

"Non-Inverting" - E_o in phase with E

$$E_o = \frac{R_o + R_1}{R_1} = 10E_1$$

Low frequency rolloff begins

$$= \frac{1}{2\pi R_1 C_1}$$

$$= 0.16\text{cps}$$

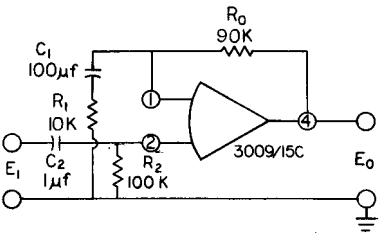

Double Rolloff - similar to above.

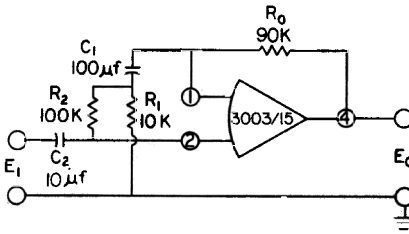

$C_1R_1 = C_2R_2$

"bootstrapped" input increases Z_i

E_0 $Z_{in} \doteq$ 10Meg maximum

AC Preamplifier - completely developed AC amplifier with high Z_{in} and double rolloff rate and gain trim.

$$\frac{E_o}{E_1} = \frac{R_o + R_1}{R_1} = 500$$

R_4 - Fine gain adjust

Low frequency rolloff begins

$$= \frac{1}{2\pi R_1 C_1} = 1.6\text{cps}$$

$R_1C_1 = R_2C_2$

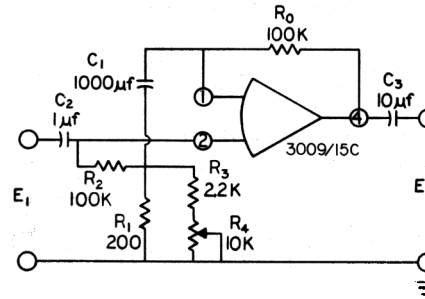

CURRENT OUTPUT DEVICES

These amplifiers will supply output current to a load in linear correspondence to the input voltage.

Feedback Loop

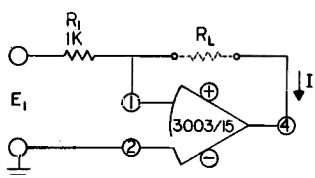

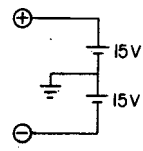

$$I = \frac{E_1}{R_1} = E_1 \text{ ma}$$

$Z_{in} = R_1 = 1K$

Simple Meter Amplifier - linear current meter reads AC input voltage.

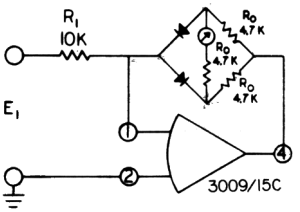

$$I_{meter} = \frac{E_1}{3R_1} = \frac{E_1}{30} \text{ ma}$$

Meter Amplifier - fully developed average reading meter.

$$I_{meter} = \frac{E_1}{R_4 + R_5}$$

$$I_m(\text{average}) = \frac{0.9E_1}{R_4 + R_5} \text{ (rms)}$$

R_5 - gain control, calibrate

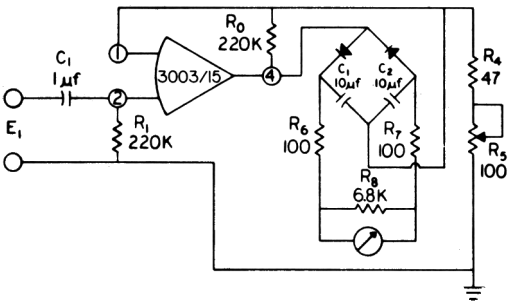

Current Injector - single terminal current available to ground.

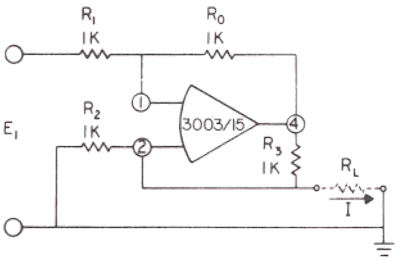

$$I = -\frac{E_1}{R_1} = -E_1 \text{ ma}$$

$$\frac{R_1}{R_2} = \frac{R_o}{R_3}$$

Observe common mode voltage limit

Linear Current Source

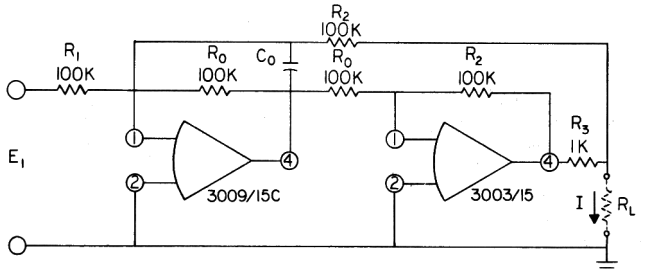

When $R_L \ll R_2$, $\frac{I_L}{E_i} = \frac{R_2}{R_1 R_3} = \frac{1\text{ ma}}{\text{volt}}$

Change R_3 for current scaling

R_3	I_L/E_1
1K	1ma/volt
100	10ma/volt
10	100ma/volt

C_o added for high frequency stability.

Deflection Coil Driver - load must be "floating," i.e. ungrounded.

$$\frac{I}{E_1} = \frac{-R_o}{R_1 R_3} = -100\text{ma/volt}$$

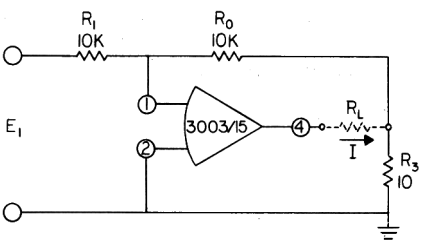

OSCILLATORS AND MULTIVIBRATORS

Oscillators give a continuous sine wave output. Multivibrator output is fixed voltage level or square wave similar to flip-flop output.

Simple Oscillator - double integrator circuit with regenerative feedback.

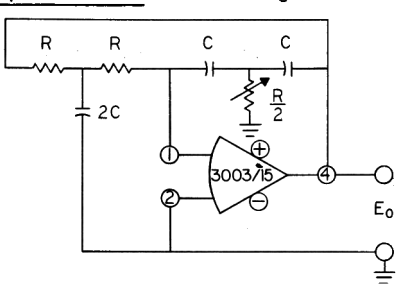

$$f = \frac{1}{2\pi RC}$$

Components R, C, and 2C should be very low tolerance

Trim R/2 until oscillation is barely sustained

Wien Bridge Oscillator - high purity sine wave generation.

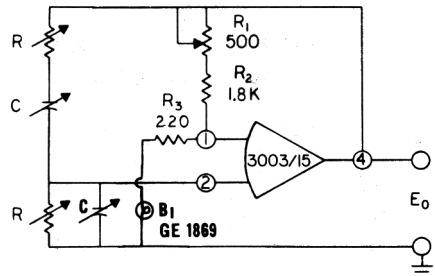

$$f = \frac{1}{2\pi RC}$$

100 - 6,000cps

Astable Multivibrator - "free-running" flip-flop action may be locked in to same external sync signal or left free.

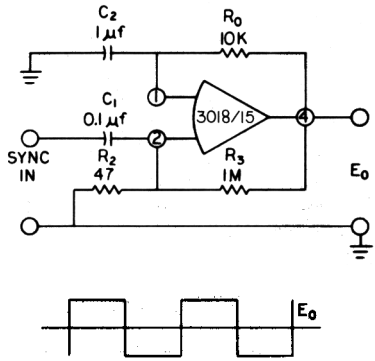

Frequency set by C_2 and R_2

Bistable Multivibrator - flip-flop or memory device for AC or trigger pulse input.

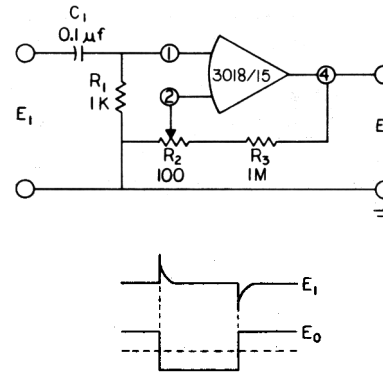

R_2 - triggering level

Monostable Multivibrator - astable multivibrator with diode to prevent triggering in reverse direction or reset action. Use Model 3018/15 with phase compensation removed.

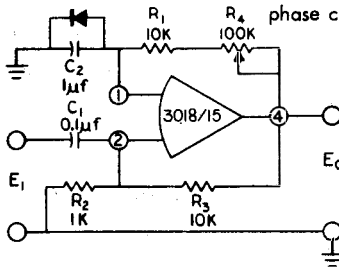

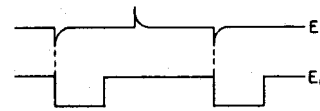

R_4 - output duration

PHASE LEAD AND LAG NETWORKS

These networks are used to stabilize servo systems by introducing phase shift as desired. Transient and steady state responses may be tailored semi-independently.

Lag Element - integrating type phase lag.

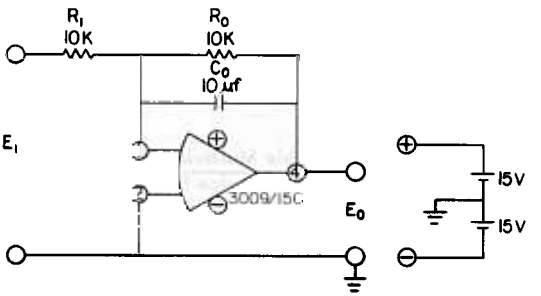

$$E_o = \frac{-R_o}{R_1} \frac{E_1}{1 + R_o C_o P}$$

$$= \frac{-10 E_1}{10 + P}$$

Adjustable Lag - non-integrating type.

Constant inverting unity gain

Maximum lag for R_1 centered for $\Delta = \frac{1}{2}$

where $0 \leq \Delta \leq 1$ is the lag setting.

$$E_o = \frac{-E_1}{1 + (\Delta - \Delta^2) RCP} = \frac{-40 E_1}{40 + P}$$

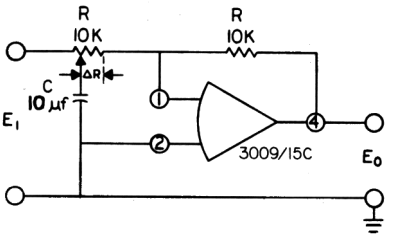

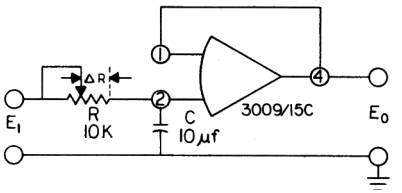

Lag value linear with R setting

Non-inverting low distortion

For = maximum

$$E_o = \frac{E_1}{1 + \Delta RCP} = \frac{10 E_1}{10 + P}$$

P = operator, $\frac{d}{dt}$ or jw

Adjustable Lead - putting input network from adjustable lag circuit in feedback path gives lead element.

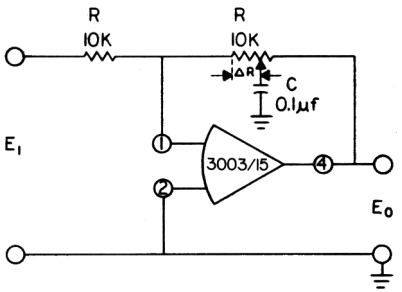

$$E_o = -[(\Delta - \Delta^2)RCP]\,E_1$$

Lead-Lag - composite lead and log networks.

$$E_o = -\frac{1 + (\Delta_1 - \Delta_1^2)\,RC_1P}{1 + (\Delta_2 - \Delta_2^2)\,RC_2P}$$

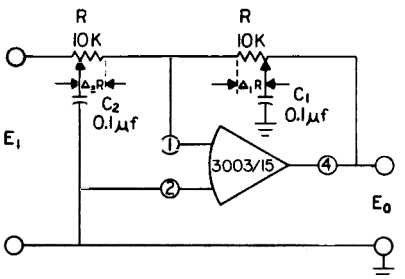

Time Delay - unity gain phase or time shift.

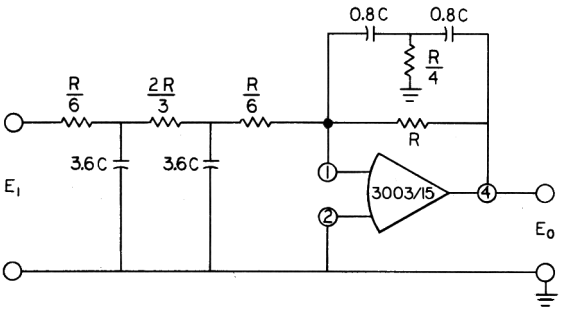

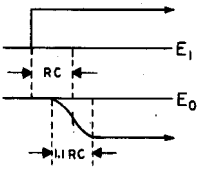

ADDITIONAL CIRCUITS

The following are various circuits which do not fall into one of the categories of the previous sections.

Absolute Value - full wave rectification

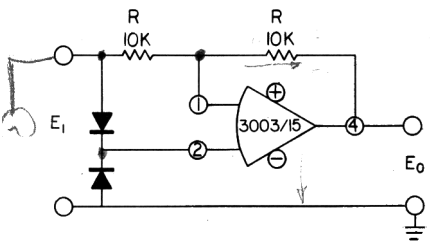

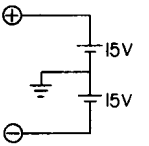

$+E_I$ follower circuit

$-E_I$ inverter circuit

$E_o = |E_I|$

Reverse diodes to give

$E_o = -|E_I|$

Null Detector - wide sensitivity range.

Non-linear resistance, R_o, increases as E_I decreases giving maximum gain near $E_I = 0$ for precise null indication.

Thyrite varistor GE 839683961

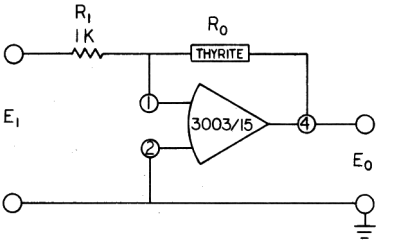

Peak Follower - peak value memory. Use low leakage capacitor.

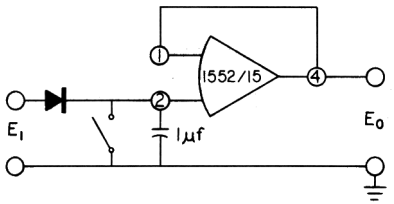

$E_o = E_I$ maximum

Common mode input voltage must be observed.

Precision Rectifier - half wave with amplification if desired. Placing rectifiers in feedback loop decreases non-linearity to very small value.

$$E_o \text{ peak} = \frac{-R_o}{R_I} E_I \text{ peak} = -5E_I \text{ peak}$$

+5 Eo peak

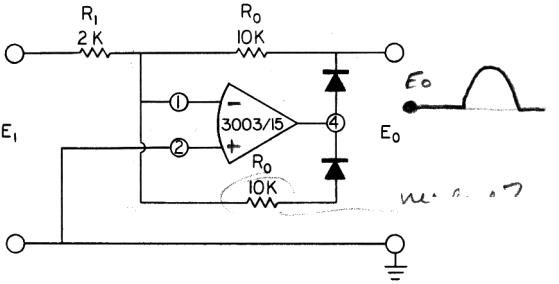

AC to DC Converter - precision conversion for measurement or control

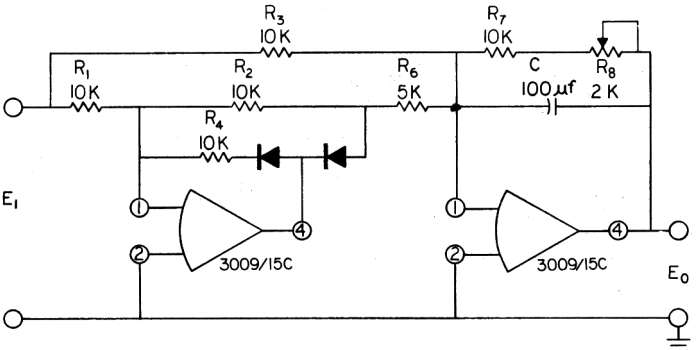

0.9 E_I rms

E_o average = E_I rms

E_{in} = 6mv to 6v rms @10-1000cps

Full wave rectifier with a smoothing filter.

Go - No Go - amplitude discriminator

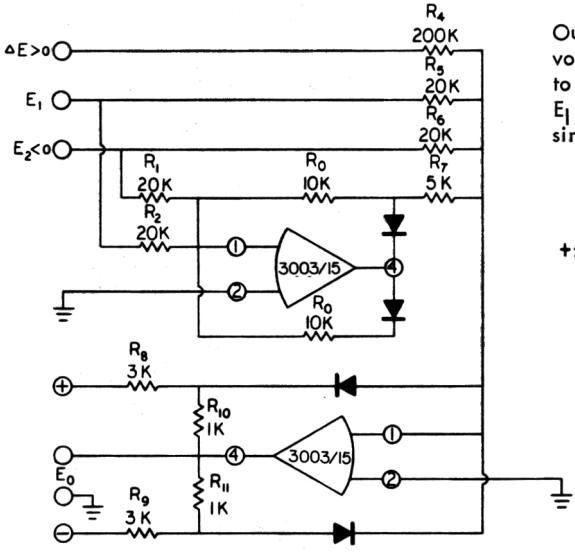

Output is normally +5 volts and will drive to -5 volts whenever E_1 is within some desired range of E_2.

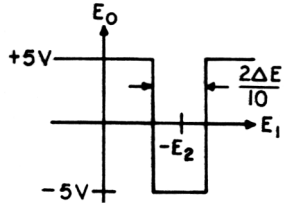

Rate Limiter

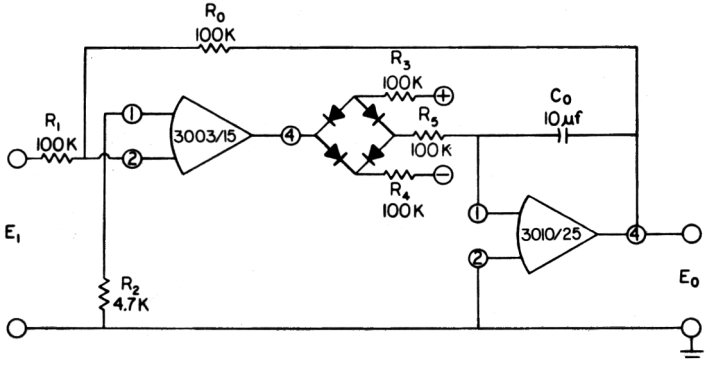

$$E_o = \frac{-R_o}{R_1} E_1 = -E_1 \qquad \text{Rate limit} = \frac{E_{supply}}{} = 7.5\text{v/sec}$$

Time Delay - time operated relay.

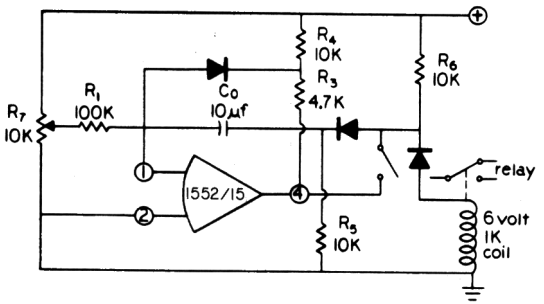

$$\text{Delay} = \frac{R_1 C_o}{2K_1}$$

Where K is setting of R_1, $0 < K < 1$

Open switch to reset, close to being timing.

Selective Amplifier - Twin T feedback.

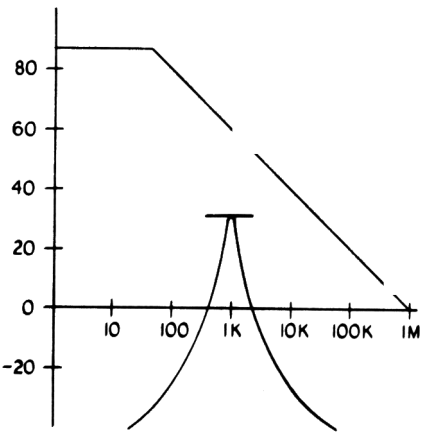

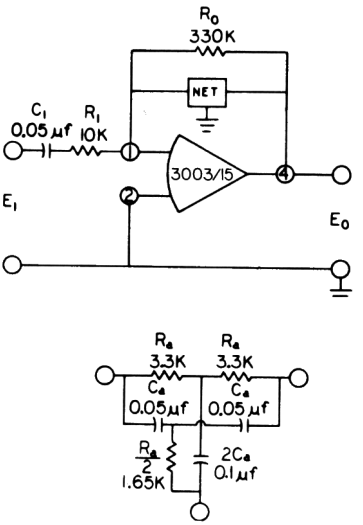

Frequency peak $= \frac{1}{2\pi R_a C_a} = 1000\text{cps}$

Gain at peak $\doteq \frac{R_o}{R_1} = 33 \doteq 30\text{db}$

Set C_1 so that $C_1 R_1 > 2C_a R_a$ and $R_1 < 100K$

$Z_{in} \doteq R_1 = 10K$

$Z_{out} < 200$ ohms

Full Wave Rectifier - precision absolute value circuit.

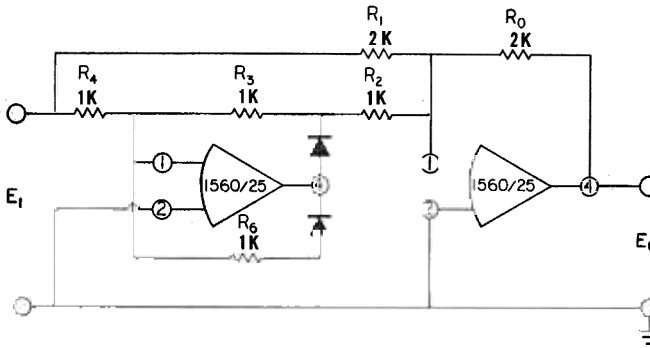

SECTION III

HOW TO TEST OPERATIONAL AMPLIFIERS

The ultimate test of an operational amplifier is its performance in your application. Adequate prediction of performance in a given application, however, would require measurement of many of the parameters discussed in preceding sections.

In this section, the test circuits and test procedures used by Burr-Brown are presented. The tests are shown for any differential input, single ended output operational amplifier. Chopper stabilized and other single ended input amplifiers use essentially the same circuits substituting the equivalent inverting circuits for non-inverting circuits shown. Test circuits D and E below do not apply to single ended input amplifiers.

Differential output amplifiers can be checked in the circuits shown and then rechecked for the other output (pin 3) reversing the inputs (pins 1 and 2). Alternatively, the outputs can be checked simultaneously using symmetrical feedback and measuring the difference between outputs.

Power booster amplifiers should be tested with a suitable operational amplifier and the pair used as a single amplifier in the standard test circuits. The test circuits and standard procedures are intended only for a distinct class of amplifiers--operational amplifiers.

BURR-BROWN STANDARD TEST CIRCUITS

Standard Test Circuit A

Measuring AC open loop characteristics eliminates DC drift and offset problems normally encountered in open loop measurements. The gain called for by the feedback at 10cps is

$$\frac{R_o + X_c}{X_c} = 116\text{dB}$$

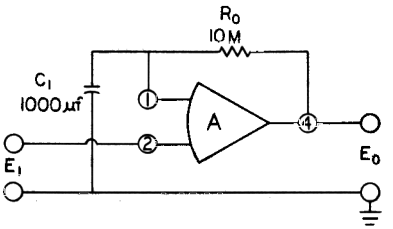

so that measured gain is determined by open loop gain in all but the highest gain operational amplifiers. Amplifier response is flat to 100cps so low frequency measurements are valid and convenient for measurement with standard instruments.

Standard Test Circuit B

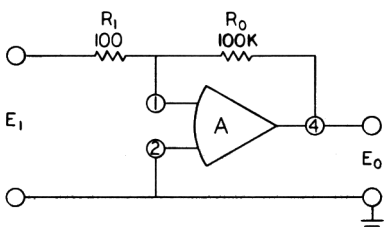

This X1000 amplifier is used for the measurement of very small voltage drift and offset values. These are measured at the output and are referred to the input by dividing by 1000. Note that R_O presents a load to the output and must be included in load calculations.

Standard Test Circuit C

In this unity gain amplifier, current due to offset and drift circulates through the feedback loop. The resulting output voltage is equal to the voltage across the feedback resistor from which the current is calculated. The isolating properties of the operational amplifier make it possible to measure the voltage across a 10Meg resistor with any low impedance voltmeter.

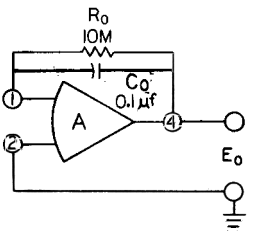

Standard Test Circuit D

Circuit operation is identical to Standard Test Circuit C. For perfectly balanced and matched differential input stages, current drift due to temperature should be identical, and their effects should cancel completely. Output voltage is a measure of the difference in current drift.

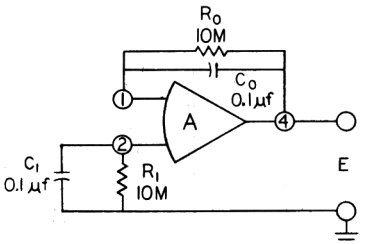

Standard Test Circuit E

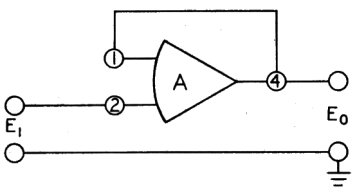

This is a unity gain non-inverting circuit. 100% feedback represents the most severe test of phase compensation and high frequency stability. Frequency response of this circuit is limited only by the operational amplifier itself in contrast to Standard Test Circuit F.

Standard Test Circuit F

The resistance level used in this circuit was chosen for convenience in power measurements. Non-zero feedback impedances result in a reduction of open loop gain and a corresponding reduction in frequency response. This bandwidth reduction is measured under the severe conditions of unity gain (-1 octave or -6db open loop).

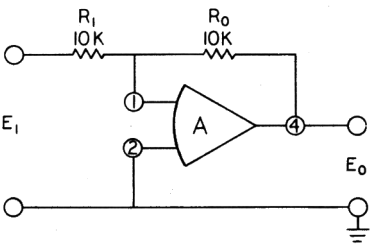

Standard Test Circuit G

Operation is identical with Standard Test Circuit F. The low resistance level used in this unity gain inverting amplifier was chosen to eliminate the problem of stray feedback capacitance at high frequencies for measurements on Burr-Brown wide bandwidth operational amplifiers.

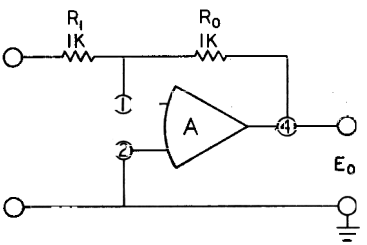

EQUIPMENT LIST - Signal Generator - HP650A or equivalent. Oscilloscope - HP130B or equivalent. VTVM- HP3400A or equivalent.

SPECIFICATION	CONNECTIONS		TEST PROCEDURES	DATA
	INPUT	OUTPUT		
Circuit A				
1. DC Gain (Open Loop)	Signal Generator @ 25 cps -90db, 33μv	VTVM, Scope	Measure output in db	gain = 90 + db out
2. Gain Stability (OL) vs. Temperature	Signal Generator @ 25 cps -80db, 100μv	"	Find open loop gain at 0°C and 50°C	stability = $\frac{\Delta \text{ gain}}{50°C}$
3. Gain Stability (OL) vs. Supply	"	"	Find open loop gain with supply voltage varied ±10%	stability = $\frac{\Delta \text{ gain}}{20\%}$
4. Input Z (OL)	Signal Generator @ 100cps -80db, 100μv, and series R_s substitution box	"	1. Measure V_{out} 2. Increase R_s until 10% drop in output	$Z_{in} = 9R_s$
5. Output Z (OL)	Signal Generator @ 100cps -80db, 100μv	VTVM, Scope, R_L substitution box	1. Without R_L, measure V_{out} 2. Find R_L for 10% drop in V_{out}. Be sure that output signal is not clipped.	$Z_{out} = \frac{R_L}{9}$
Circuit B				
6. Rated Voltage and Current	Signal Generator @ 100cps -80db, 100μv	Scope, R_L substitution box	1. Increase input amplitude until distortion noted 2. Measure maximum V_{out} from oscilloscope trace	$I_{out} = \frac{V_{out}}{R_L \parallel R_o}$
7. Bandwidth (OL)	Signal Generator, @ -30db, 30mv	VTVM, Scope	Increase frequency until OL gain drops to unity (output, -30db)	bandwidth = f max.

SPECIFICATIONS	CONNECTIONS		TEST PROCEDURES	DATA
	INPUT	OUTPUT		
8. Input Voltage Offset[1]	Connect to common	Scope	Measure V_{out}	V_{in} off = $\frac{V_{out}}{1000}$
9. Input Voltage Drift vs. Temperature	"	"	Find input voltage offset at 0°C and 50°C	drift = $\frac{\Delta V_{offset}}{50°C}$
10. Input Voltage Drift vs. Supply	"	"	Find input voltage offset with supply voltage varied ± 10%	drift = $\frac{\Delta V_{offset}}{20\%}$
11. Input Voltage Drift vs. Time	"	Strip recorder	1. Record V_{out} off for 24 hours 2. Find maximum input voltage offset change	drift = V_{in} off (max.)
12. Input Noise	"	VTVM, Scope 10Kcps filter	Measure output noise in mv, rms at output of 10 Kcps low pass filter.	input noise = $\frac{\text{output noise}}{1000}$
Circuit C				
13. Input Current Offset	As Shown	Scope	Measure DC output voltage	I_{in} off = $\frac{V_{out}}{10\ \text{Meg}}$
14. Input Current Drift vs. Temperature	"	"	Find input current offset at 0°C and 50°C	drift = $\frac{\Delta I_{in}\ \text{off}}{50°C}$
15. Input Current Drift vs. Supply	"	"	Find input current offset with supply voltage varied ± 10%	drift = $\frac{\Delta I_{in}\ \text{off}}{20\%}$
Circuit D				
16. Differential Current Drift	No connection	"	Measure DC output voltage	drift = $\frac{\Delta V_{out}}{10\ \text{Meg}}$

SPECIFICATION	CONNECTIONS		TEST PROCEDURES	DATA
	INPUT	OUTPUT		
Circuits E (non-inverting) or F (inverting)				
17. Frequency Response(2)	Signal Generator at -30db, 30mv	VTVM, Scope	Increase frequency until V_{out} drops 3db	response = F max.
18. Rise Time	Square Wave Generator at 100mv, p-p	Scope	Observe on expanded time scale and measure output rise time	amplifier rise time = output rise time - rise time of square wave input
19. Capacitive Loading	Signal Generator	VTVM, C substitution box	Vary oscillator frequency near high frequency response limit of amplifier and find maximum C load for stability.	capacitive loading - C max.
Circuit E				
20. Input Z, Common Mode	Signal Generator @ 100cps 0db with series R_s substitution box	VTVM, Scope	1. Measure V_{out} 2. Increase R_s until output drops 10%	$Z_{in} = 9R_s$
Circuit F				
21. Full Power Response	Signal Generator @ 100cps	Scope, R_L substitution box	1. Set input amplitude for maximum specified voltage swing 2. Increase frequency to distortion	response = F max.

FOOTNOTES -

(1) non-adjustable amplifiers only

(2) use standard test circuit G for Models 1510, 1560, and 1525.

SECTION IV

SELECTING THE PROPER OPERATIONAL AMPLIFIER

Now, with the theory, circuits, and test procedures at our command, we are ready to select an amplifier. A glance at the representative specifications, given in the Appendix, shows the variety of ratings available. These represent only a small fraction of the operational amplifiers available from Burr-Brown alone. This section presents several approaches to selecting the proper operational amplifier from the wide range of available units.

Focus on Limiting Specifications

To apply the operational amplifier correctly, none of its ratings should be exceeded. It would, however, be uneconomical to apply the device too conservatively. With so many specifications and so many amplifiers, the secret is to focus on the limiting specification.

In the majority of DC applications, the limiting factor will be DC drift. Drift in operational amplifiers is primarily due to temperature effects on the input transistors causing base voltages and base currents to vary. The input current offset (base current) must flow to ground through the external feedback network and through the source. The input current drift times the effective resistance to ground gives a voltage effect which may add to or subtract from the input voltage drift. If the resistance to ground is the same for both inputs, the input current variations tend to cancel as indicated by the specification, "differential current drift." A comparison of the input stability (combined effects of voltage and current drifts over your temperature range) with your input signal will give a quick indication of the accuracy you can expect.

Specifications other than drift which can help you focus on the proper amplifier are bandwidth, output capability, and packaging. The requirement for a high gain-bandwidth product may narrow the field to a few high speed amplifiers. High

power output requirements may rule out the smaller packages and more economical units. A packaging preference will rule out comparable units in other configurations.

While any one of thirty or more specifications could be limiting in your application, familiarity with operational amplifiers will enable you to spot quickly the critical parameter in your case.

Avoid Closed Loop vs. Open Loop Confusion

While an amplifier is rarely used open loop, open loop specifications are required to provide the information needed for all possible closed loop applications. As we have seen in the preceeding sections, there may be a vast, but predictable, difference between open loop and closed loop characteristics such as input impedance, output impedance, and bandwidth. The amplifier for your application may be completely described with either closed loop specifications or open loop specifications, but the relationship between the two should be clearly understood.

Selection Check List

The following is a check list of the information required to select the proper amplifier for your needs. Be sure you have enough information.

1. The Source:	What type of source do you have? Voltage level? Impedance?
2. The Load:	What type of load do you have? Voltage level required? Impedance?
3. Performance:	In the closed loop, what is the required gain? Bandwidth? Accuracy? Linearity? Input Impedance? Output Impedance? DC drift? Noise? In the open loop, what standard Burr-Brown amplifier will do this? Any exceptions?
4. Environment:	Where will the amplifier be used? Temperature range? Other requirements? Formal specifications?
5. Power Supply:	Available in system/instrument? Number of amplifiers per supply? Current drain?
6. Package:	Type of mounting? Controls? Connectors?

7. Availability: Quantity? Future potential? Delivery requirements? Price?

The above information will define your requirement fully.

Assistance Available from Burr-Brown

The following services are available to you for the asking.

The latest specifications - Operational amplifiers are continually being improved. Be sure your information is up to date.

Applications assistance - Given the information in the preceeding check list, an amplifier will be recommended with an appropriate circuit.

Custom designs - While the catalog amplifiers are optimized for general purpose use, both price and performance can be improved frequently with an amplifier tailored for a specific application.

Special packaging - Ask for a quotation on an amplifier packaged to fit your configuration.

Availability - Get all the information you need for on-schedule installation at minimum cost.

Contact Burr-Brown or your nearest representative for any or all of these services.

APPENDIX B

Typical Burr-Brown Operational Amplifiers

The specifications shown in Table 1 and Table 2 (on the following page) are indicative of: (1) the complexity of operational amplifiers, (2) the state of the art in operational amplifiers as of the publishing date of this handbook, and (3) the extensive line of operational amplifiers manufactured by Burr-Brown Research Corporation. Complete specifications are available on request.

TABLE 1

Performance at 25°C with rated supply.

	3003	3009	3010	3013	3018	3019	Units
RATED OUTPUT							
Voltage (min)	± 10	± 10	± 10	± 10	± 10	± 10	V
Current (min)	± 20	± 5	± 20	± 20	± 20	± 20	mA
DC GAIN (typ)	110	90	160	92	112	100	dB
UNITY GAIN CROSSOVER (typ)	2	1	15	10	Broad-band	1.5	MHz
FULL POWER RESPONSE (min)	20	10	1000	500	Note 7	20	kHz
SLEWING RATE (min)	1.2	0.6	60	30		1.2	V/μs
INPUT VOLTAGE							
Offset, 25°C (typ)(1)	±0.2	± 3	± 10	±0.5	±0.5	±0.5	mV
Drift, -25°C to +85°C (typ)	± 1	± 10	±0.2	± 10	± 10	± 5	μV/°C
(max)	± 3	± 20	±0.5	± 15	± 15	± 10	μV/°C
INPUT BIAS CURRENT							
Offset, 25°C (typ)(2)	± 5	± 20	±0.02	±0.05	±0.1	± 5	nA
Average Drift, -25°C to +85°C (typ)(2)	±0.1	±1.0	±0.0005	Note 3	Note 3	±0.2	nA/°C
(max)(2)	±0.3	±1.5	±0.001	Note 3	Note 3	±0.5	nA/°C
INPUT NOISE TO 10 kHz (typ)	3	5	6	6	10	Note 8	μV, rms
INPUT IMPEDANCE							
Differential (typ)	0.5	0.5	0.5	$10^{11}\Omega$	$10^{11}\Omega$	0.5	MΩ
Common Mode (typ)(2)	50	50	—	$10^{11}\Omega$	$10^{11}\Omega$	50	MΩ
INPUT VOLTAGE LIMITS							
Common Mode (max)	± 10	± 10	—	± 10	± 10	± 10	V
Absolute Maximum	± 15	± 15	± 15	± 15	± 15	± 15	V
OUTPUT IMPEDANCE (typ)	5	5	5	5	0.5	5	kΩ
OPERATING TEMPERATURE RANGE							
Minimum	- 40	- 40	- 40	- 40	- 40	- 40	°C
Maximum	+ 85	+ 85	+ 85	+ 85	+ 85	+ 85	°C
POWER SUPPLY							
Rated (typ)(4)	± 15	± 15	± 15	± 15	± 15	± 15	Vdc
Quiescent (max)(5)	± 5	± 5	± 10	± 8	± 5	± 5	mA
BASIC MODULE TYPE(6)	/15	/15C	/25	/15	/15	/15	

Notes: Specifications subject to change without notice.
(1) Externally adjustable to zero. Alternate /13, /16, and /26 modules feature internal voltage offset adjustment.
(2) Either input.
(3) Input current doubles every 10°C rise.
(4) Range: ±3 volts of typical for ±15 and ±26 volt supplies; ±5 volts of typical for ±60 and ±120 volt supplies.
(5) Total current approximately equal to quiescent plus output current.
(6) See mechanical data for alternate module types.
(7) Through appropriate selection of phase compensation, the user can achieve gain-bandwidth products as high as 100 MHz, full-power response to 100 kHz, and slewing rates to 10 V/μs.
(8) Typically less than 1 μV, rms noise. Complete noise specifications available upon request.

TABLE 2

Performance at 25°C with rated supply.

	1514	1540	1542	1552	1560	1706	Units
RATED OUTPUT							
Voltage (min)	± 10	± 20	±100	± 10	± 10	± 10	V
Current (min)	± 20	± 10	± 10	± 20	± 30	± 10	mA
DC GAIN (typ)	106	106	110	106	90	100	dB
UNITY GAIN CROSSOVER (typ)	0.75	1.5	0.4	2	30	1	MHz
FULL POWER RESPONSE (min)	10	10	3	100	2000	10	kHz
SLEWING RATE (min)	0.6	1.2	1.8	6	120	0.6	V/μs
INPUT VOLTAGE							
Offset, 25°C (typ)(1)	±0.3	±0.3	±0.5	±0.5	±0.5	±0.5	mV
Drift, -25°C to +85°C (typ)	± 5	± 5	± 10	± 5	± 10	± 5	μV/°C
(max)	± 15	± 10	± 25	± 15	± 25	± 15	μV/°C
INPUT BIAS CURRENT							
Offset, 25°C (typ)(2)	± 10	± 10	± 10	±0.05	±0.1	± 10	nA
Average Drift, -25°C to +85°C (typ)(2)	±0.3	±0.3	±0.5	Note 3	Note 3	±0.5	nA/°C
(max)(2)	±0.5	±0.5	±1.0	Note 3	Note 3	±1.0	nA/°C
INPUT NOISE TO 10 kHz (typ)	6	3	10	6	10	6	μV, rms
INPUT IMPEDANCE							
Differential (typ)	0.5	0.5	0.5	$10^{11}\Omega$	$10^{11}\Omega$	0.5	MΩ
Common Mode (typ)(2)	50	100	100	$10^{11}\Omega$	—	50	MΩ
INPUT VOLTAGE LIMITS							
Common Mode (max)	± 10	± 15	± 20	± 10	—	± 10	V
Absolute Maximum	± 15	± 26	±120	± 15	± 15	± 15	V
OUTPUT IMPEDANCE (typ)	0.5	7	10	0.5	0.1	5	kΩ
OPERATING TEMPERATURE RANGE							
Minimum	- 40	- 40	- 40	- 40	- 40	- 40	°C
Maximum	+ 85	+ 85	+ 85	+ 85	+ 85	+ 85	°C
POWER SUPPLY							
Rated (typ)(4)	± 15	± 26	±120	± 15	± 15	± 15	Vdc
Quiescent (max)(5)	± 10	± 5	± 10	± 8	± 20	± 5	mA
BASIC MODULE TYPE(6)	/25	/15	/25	/15	/25	/17	

Notes: Specifications subject to change without notice.

(1) Externally adjustable to zero. Alternate /13, /16, and /26 modules feature internal voltage offset adjustment.

(2) Either input.

(3) Input current doubles every 10°C rise.

(4) Range: ±3 volts of typical for ±15 and ±26 volt supplies; ±5 volts of typical for ±60 and ±120 volt supplies.

(5) Total current approximately equal to quiescent plus output current.

(6) See mechanical data for alternate module types.

(7) Through appropriate selection of phase compensation, the user can achieve gain-bandwidth products as high as 100 MHz, full-power response to 100 kHz, and slewing rates to 10 V/μs.

(8) Typically less than 1 μV, rms noise. Complete noise specifications available upon request.

TABLE 3

MODEL 3016/25 Power Booster

Rated Output		DC Gain O.L.	Operating Temperature Range		Power Supply	
					rated	quies
volts	mA	typ	min	max	typ	max
min	min	dB	°C	°C	volts	mA
± 10	±200	0	-40	+85	± 15	± 15

MECHANICAL DATA

/13 PACKAGE

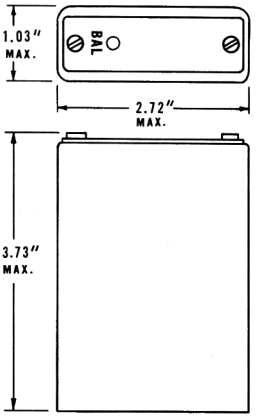

Typical Mounting
Connector Burndy EC 4205-P5
Applies to /13 Package and /16 Package

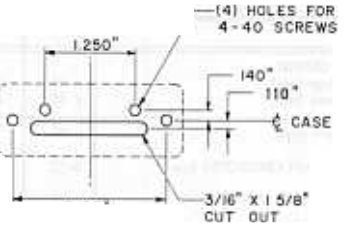

/15 PACKAGE

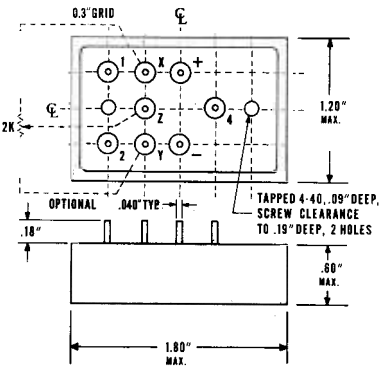

/25 PACKAGE

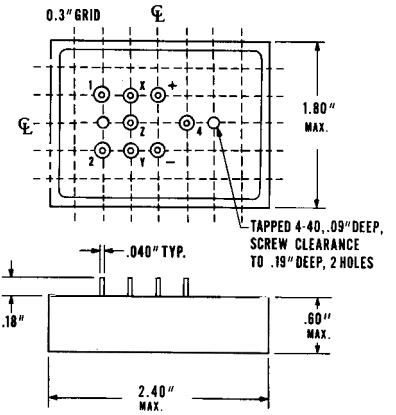

/16 PACKAGE

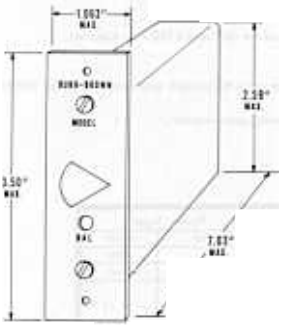

/16-2 PACKAGE

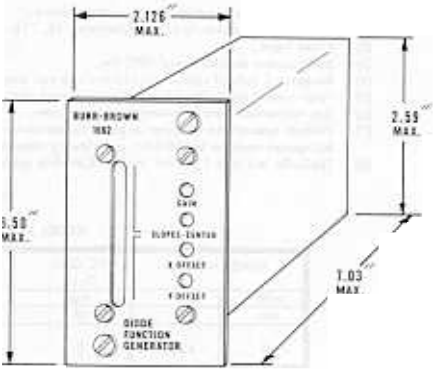

MECHANICAL DATA (continued)

/17 PACKAGE

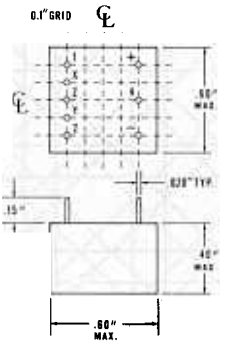

/19 PACKAGE

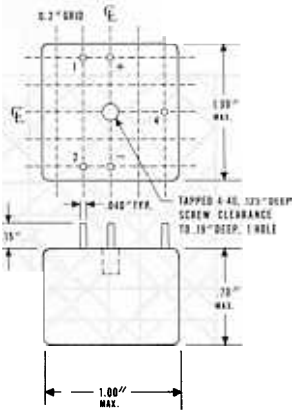

/26 PACKAGE

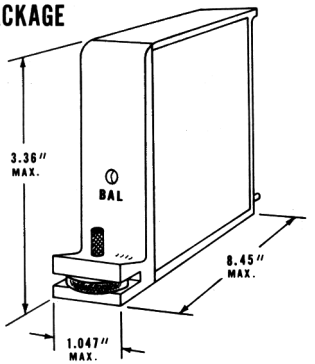

/29 PACKAGE

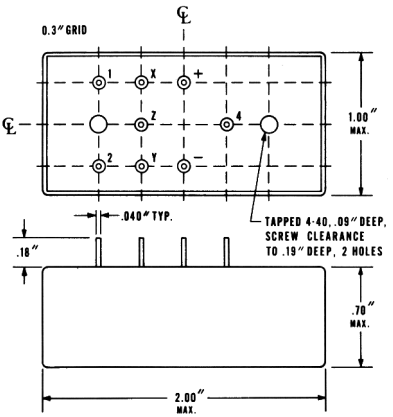

/40 PACKAGE

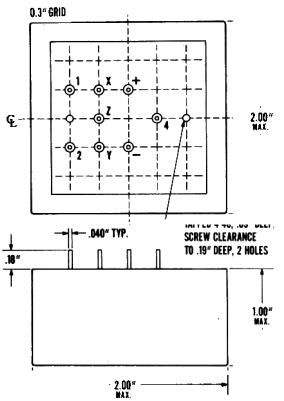

REACTANCE CHART

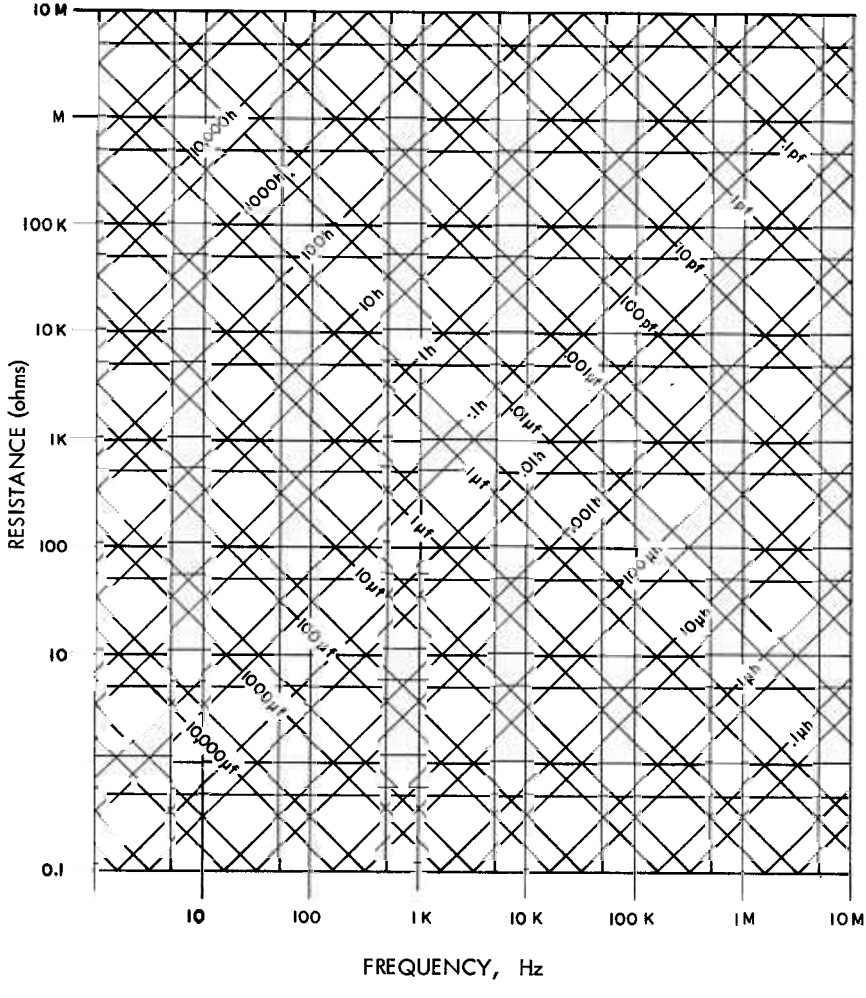

DOMESTIC ENGINEERING REPRESENTATIVES

ALABAMA
Huntsville
BCS Associates, Inc.
Phone: (205) 534-1648

ARIZONA
Phoenix
Williams Associates, Inc.
Phone: (602) 254-6085

Tucson
Burr-Brown Research Corporation
Phone: (602) 294-1431

ARKANSAS (See Dallas)

CALIFORNIA
Los Angeles
Instrument Specialists, Inc.
Phone: (213) 665-5181

Santa Clara
Instrument Specialists, Inc.
Phone: (408) 244-1505

CANADA
Downsview, Ontario
Allan Crawford Associates
Phone: (416) 636-4910

Montreal, P. Q.
Allan Crawford Associates
Phone: (514) 739-6776

Ottawa, Ontario
Allan Crawford Associates
Phone: (613) 725-1288

Vancouver, B. C.
Allan Crawford Associates
Phone: (604) 291-7161

COLORADO
Denver
Williams Associates, Inc.
Phone: (303) 388-4391

CONNECTICUT
East Hartford
Measurement Equipment Co., Inc.
Phone: (203) 874-9222

FLORIDA
Orlando
BCS Associates, Inc.
Phone: (305) 425-2764

ILLINOIS
Chicago
Loren F. Green & Associates
Phone: (312) 286-6824

LOUISIANA
New Orleans
BCS Associates, Inc.
Phone: (504) 888-2266

MARYLAND
Silver Spring
QED Electronics, Inc.
Phone: (301) 588-8134

MASSACHUSETTS
Wakefield
Measurement Equipment Co., Inc.
Phone: (617) 245-4870

MICHIGAN
Detroit
Sheridan Associates, Inc.
Phone. (313) 358-3333

MINNESOTA
Minneapolis
Loren F. Green & Associates
Phone: (612) 781-1611

MISSOURI
St. Louis
Sheridan Associates, Inc.
Phone: (314) 524-4800

NEW JERSEY
Camden
QED Electronics, Inc.
Phone: (215) 925-8711

NEW MEXICO
Albuquerque
Williams Associates, Inc.
Phone: (505) 255-1638

NEW YORK
Albany
J. A. Reagan Company, Inc.
Phone: (518) 436-9649

Binghamton
J. A. Reagan Company, Inc.
Phone: (607) 723-9661

Mt. Vernon
QED Electronics, Inc.
Phone: (914) 968-2200

New Hartford
J. A. Reagan Company, Inc.
Phone: (315) 732-3775

Rochester
J. A. Reagan Company, Inc.
Phone: (716) 473-2115

NORTH CAROLINA
Greensboro
BCS Associates, Inc.
Phone: (919) 273-1918

OHIO
Cincinnati
Sheridan Associates, Inc.
Phone: (513) 761-5432

Cleveland
Sheridan Associates, Inc.
Phone: (216) 237-9145

Dayton
Sheridan Associates, Inc.
Phone: (513) 277-8911

OKLAHOMA (See Dallas)

PENNSYLVANIA
Pittsburgh
Sheridan Associates, Inc.
Phone: (412) 243-6655

Philadelphia (See Camden, N.J.)

TEXAS
Dallas
Norvell Associates, Inc.
Phone: (214) 357-6451

Houston
Norvell Associates, Inc.
Phone: (713) 774-2568

UTAH
Salt Lake City
Williams Associates, Inc.
Phone: (801) 466-8709

VIRGINIA (See Maryland)

WASHINGTON
Seattle
Instrument Specialists, Inc.
Phone: (206) 767-4260

WASHINGTON, D.C. (See Maryland)

OVERSEAS REPRESENTATIVES

Boris Garfunkel E Hijos S. A.
Bartolome Mitre 1824
Buenos Aires, ARGENTINA
Phone: 45-5821

Kenelec Imports Pty. Ltd.
49 Essex Road
Mt. Waverley, Victoria, AUSTRALIA
Phone: Melbourne: 277 2818
Sydney: 318 243
Adelaide: 232 703

Dipl. Ing. Peter Marchetti
Sales and Service
A-1060 Wien, Capistrangasse 3
Vienna, AUSTRIA
Phone: 57 82 30

Delta Equipment s.a.
28, rue du Tabellion
Bruxelles 5, BELGIUM
Phone: 02/ 38.40.76

Instrumentacion
Henrik A. Langebaek & Cia. Ltda.
Carrera 7 No. 48-59
Apartado Aereo 6287
Bogota 1, D.E., COLOMBIA
Phone: 45 78 06
45 55 46

V. H. Prins
129, Sydvestvej
2600 Glostrup, DENMARK
Phone: (01) 96 88 44

Suministros Tecnicos Ltda.,
Box 259-4492, Guayaquil
Calle Rumichaca 825-27, ECUADOR
Phone: 12-419

General Test Instruments Ltd.
Gloucester Trading Estate
Hucclecote, Gloucester, ENGLAND
Phone: Gloucester 67154

Nores & CO OY
Fabianinkatu 32
Helsinki 10, FINLAND
Phone: 13360

Societe S.E.P.T.A.
13, rue de Tiquetonne
75 - Paris 2e - FRANCE
Phone: 236-37-45

Dipl. Ing. Ernst Foy
8 Munchen 2
Haremonstrasse 28
Munich, GERMANY
Phone: 0811/516956 6

Greek Electronics Company Ltd.
6, Kriezotou Street
Athens, 134, GREECE
Phone: 625.469

Air-Parts International N.V.
Electronics Department
149, Haagweg
Ryswyk (Z.H.) HOLLAND
Phone: (070) 989392

Recom Electronics Co. Ltd.
74, Nordau Blvd.
P.O. Box 6170
Tel-Aviv, ISRAEL
Phone: 44 32 44, 25 07 52
Service Department 25 77 20

Strumentazione Industriale Regolazioni
Via Baldinucci n.60
20158 Milano, ITALY
Phone: 376 198 2

Kyokuto Boeki Kaisha, Ltd.
7th Floor, New Otemachi Bldg.
4, 2-Chome, Otemachi, Chiyoda-Ku
Tokyo, JAPAN
Phone: (270) 7711

Electro Promociones Internacionales, S.A.
Lucerna Num. 58
MEXICO 6, D.F.
Phone: 35-41-02

W. & K. McLean, Ltd.
P.O. Box 3097
103-105 Felton Mathew Avenue
Auckland, NEW ZEALAND
Phone: 586-000

Hugo Riso A/S
Carl Grandahls Vei 1
P.O. Box 8 Toasen
Oslo 8, NORWAY
Phone: 23 25 80

I. and S. Corporation
2nd Floor, Dada Chambers
Bunder Road, P.O. Box 5025
Karachi-2, PAKISTAN
Phone: 223322

TELECTRA
Rua Rodrigo Da Fonseca, 103
Lisbon 1, PORTUGAL
Phone: 686072

David Pollock (Pty.) Ltd.
17 Melle St., Braamfontein
P.O. Box 31018
Johannesburg, SOUTH AFRICA
Phone: 724-8274

DISTESA
Viriato, 52
Madrid-10, SPAIN
Phone: 223 50 73

Amerikanska Teleprodukter AB
Nybohovsgrand 56
P.O. Box 43070
Stockholm 43, SWEDEN
Phone: 18 29 30
18 29 39

Telemeter Electronic AG
Gerechtigkeitsgasse 25
P.O. Box 140
8027 Zurich, SWITZERLAND
Phone: 051-257872

TELEKOM
Engineering Bureau
P.O. Box 376
Karakoy, TURKEY
Phone: 49 40 40

Vibronics Private Limited
4, Kurla Industrial Estate
Agra Road, Ghatkopar
Bombay-77, INDIA
Phone: 551501

BURR-BROWN

BB

P.O. BOX 11400 · INTERNATIONAL AIRPORT INDUSTRIAL PARK
TUCSON, ARIZONA 85706 Phone: 602-294-1431 Twx: 910-952-1111
Cable Address: BBRCORP

Mailing Address:

Texas Instruments
Post Office Box 655303
Dallas, Texas 75265